NOTES:

1. HORIZONTAL AND VERTICAL CONTROL WAS ESTABLISHED FROM NC VRS.
2. COORDINATES SHOWN ARE GRID COORDINATES.
3. ALL BEARINGS ARE GRID BEARINGS UNLESS OTHERWISE NOTED.
4. ALL DISTANCES ARE HORIZONTAL GROUND DISTANCES UNLESS OTHERWISE NOTED.
5. AREAS ARE COMPUTED BY COORDINATE METHOD.
6. THIS MAP IS SUBJECT TO ANY FACTS THAT MAY BE DISCLOSED BY A FULL AND ACCURATE TITLE SEARCH.
7. SUBJECT AREA LOCATED WITHIN FLOOD HAZARD ZONE 'X' AS SCALED FROM FIRM MAP # 3720313500K EFFECTIVE DATE: AUGUST 28, 2018.
8. EXISTING UTILITIES AND STRUCTURES SHOWN, BOTH UNDERGROUND AND ABOVE GROUND, ARE BASED ON SURFACE OBSERVATIONS, UTILITY PAINT MARKINGS AND/OR UTILITY MAPS AVAILABLE. ACTUAL SIZES, TYPES AND LOCATIONS ARE TO BE ASSUMED, AT BEST, AND SHOULD BE FIELD VERIFIED.
9. SEE PLAT FOR ADDITIONAL COMMENTS PREPARED BY: ATLANTIC COAST SURVEY, PLLC; DATED 9/19/17 AND RECORDED IN P.B. 63, PG. 136.

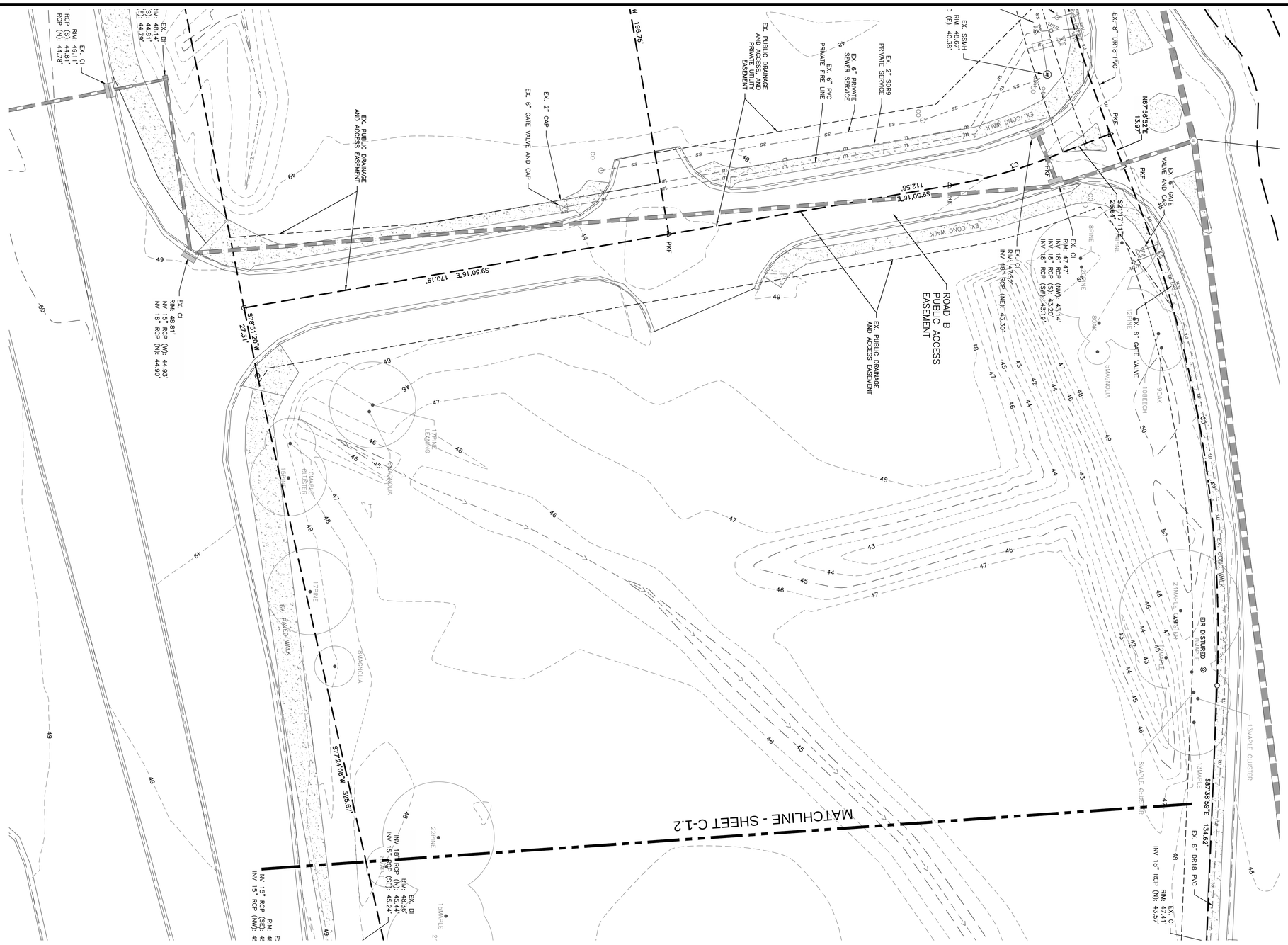


## Curve Table

| Curve # | Length | Radius | Delta | Chord | Chord Direction |
|---|---|---|---|---|---|
| C1 | 75.96' | 522.50' | 8.33° | 75.89' | S87°08'40"E |
| C2 | 182.18' | 522.50' | 19.98° | 181.28' | N78°42'08"E |
| C3 | 39.97' | 200.00' | 11.45° | 39.90' | S15°33'43"E |
| C4 | 117.43' | 616.45' | 10.91° | 117.25' | N84°21'46"E |
| C5 | 209.75' | 477.50' | 25.17° | 208.07' | N79°45'58"E |
| C6 | 38.79' | 200.00' | 11.11° | 38.73' | S82°05'35"E |
| C7 | 38.79' | 200.00' | 11.11° | 38.73' | S82°05'35"E |
| C8 | 38.84' | 25.00' | 89.01° | 35.05' | S43°08'43"E |
| C9 | 132.76' | 279.73' | 27.19° | 131.52' | S8°36'13"W |

COPYRIGHT © 2019
SEPI INC.

VICINITY MAP
NOT TO SCALE

PROJECT NO. SE18.191.00
SHEET NO. C-1.1

PROJECT
**STATE EMPLOYEES' CREDIT UNION**
ADDRESS:
4355 S 17TH STREET
WILMINGTON NC 28412

**EXISTING CONDITIONS**

OWNER/DEVELOPER/APPLICANT
**STATE EMPLOYEES' CREDIT UNION**
ADDRESS:
119 N. SALISBURY STREET
RALEIGH, NORTH CAROLINA 27603
PHONE: 919-839-5300

811 Know what's **below.** **Call** before you dig. 3 WORKING DAYS BEFORE YOU DIG
FOR THE LOCATION OF UNDERGROUND FACILITIES

THE LOCATIONS OF EXISTING UNDERGROUND UTILITIES WERE SHOWN IN AN APPROXIMATE WAY ONLY AND WERE NOT BEEN INDEPENDENTLY VERIFIED BY THE OWNER OR ITS REPRESENTATIVE. THE CONTRACTOR SHALL DETERMINE THE EXACT LOCATION OF ALL EXISTING UTILITIES BEFORE COMMENCING WORK, AND AGREES TO BE FULLY RESPONSIBLE FOR ANY AND ALL DAMAGES WHICH MIGHT BE OCCASIONED BY THE CONTRACTOR'S FAILURE TO EXACTLY LOCATE AND PRESERVE ANY AND ALL UNDERGROUND UTILITIES.

NOTICE:
CONSTRUCTION SITE SAFETY IS THE SOLE RESPONSIBILITY OF THE CONTRACTOR. NEITHER THE OWNER NOR THE ENGINEER SHALL BE EXPECTED TO ASSUME ANY RESPONSIBILITY FOR SAFETY OF THE WORK, OF PERSONS ENGAGED IN THE WORK, OF ANY NEARBY STRUCTURES, OR OF ANY OTHER PERSONS.

ARCHITECT OF RECORD
PROJECT MANAGER
MTA
DRAWN BY
JRS
FIRST ISSUE DATE
07/03/2019

SEPI
TRANSPORTATION • TRAFFIC • SURVEYING • ENVIRONMENTAL • SITE/CIVIL • INSPECTIONS • CONSTRUCTION MANAGEMENT

1 GLENWOOD AVE, SUITE 600
RALEIGH, NC 27603
PHONE 919.789.9977

11020 DAVID TAYLOR DR., SUITE 115
CHARLOTTE, NC 28262
PHONE 704.714.4880

5030 NEW CENTRE DR., SUITE B
WILMINGTON, NC 28403
PHONE 910.523.5715

sepiinc.com

PRELIMINARY NOT FOR CONSTRUCTION
SEPI ENGINEERING & CONSTRUCTION, INC. C-2378 NORTH CAROLINA PROFESSIONAL SEAL ENGINEER

SUMMIT DESIGN AND ENGINEERING SERVICES
Creatively Inspired - Technically Executed
License #: P-0339
100 East Six Forks Road, Suite 300
Raleigh, NC 27609
Voice: (919) 322-0115 Fax: (919) 322-0116
www.SummitDE.net

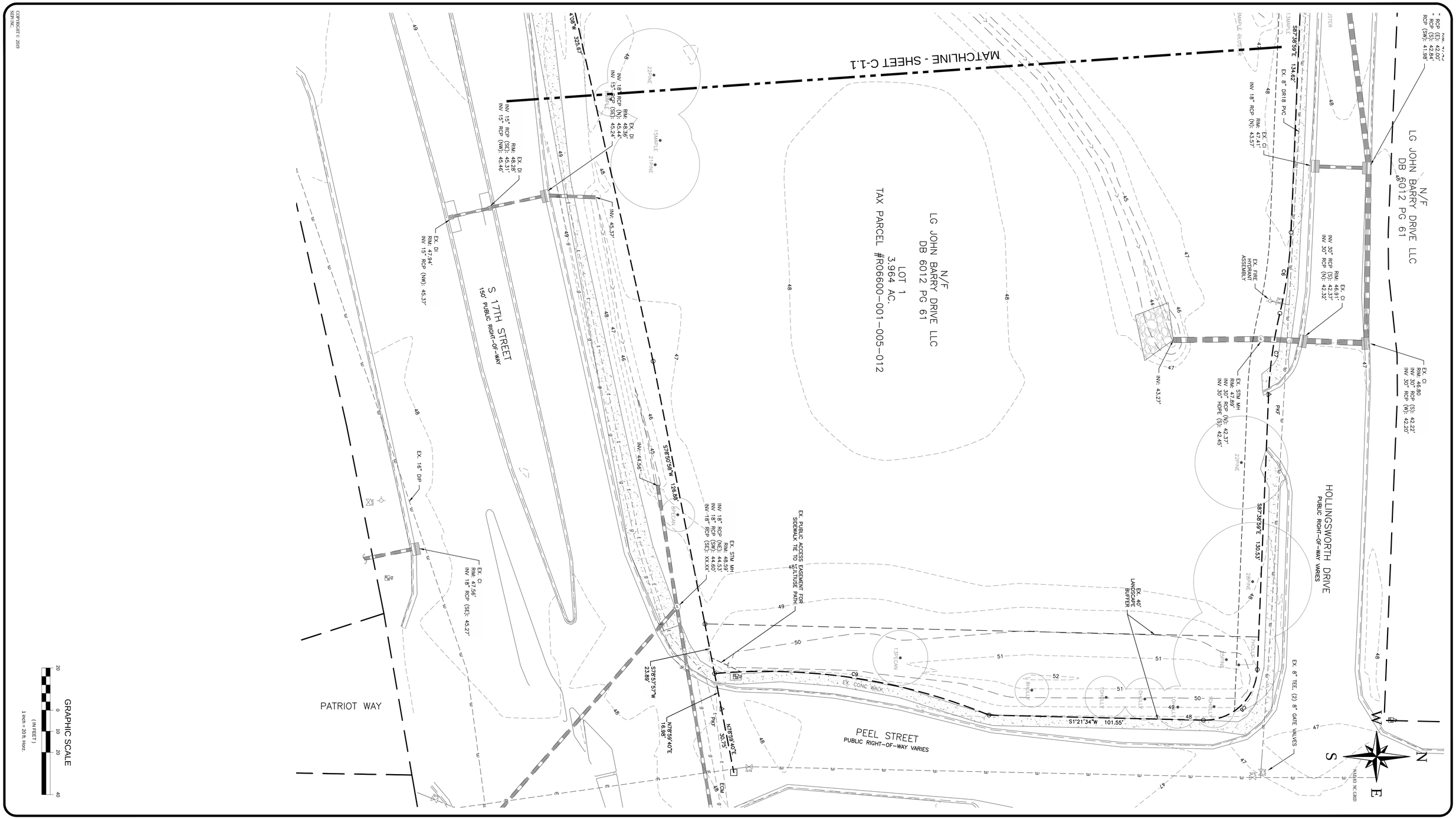


COPYRIGHT © 2019
SEPI, INC.

PROJECT NO.
**SE18.191.00**

SHEET NO.
**C-1.2**

PROJECT
# STATE EMPLOYEES' CREDIT UNION

**ADDRESS:**
**4355 S 17TH STREET**
**WILMINGTON NC 28412**

## EXISTING CONDITIONS

OWNER/DEVELOPER/APPLICANT
**STATE EMPLOYEES' CREDIT UNION**

**ADDRESS:**
**119 N. SALISBURY STREET**
**RALEIGH, NORTH CAROLINA 27603**
**PHONE: 919-839-5300**

811
Know what's **below.**
**Call** before you dig.
3 WORKING DAYS
BEFORE YOU DIG
FOR THE LOCATION OF
UNDERGROUND FACILITIES

THE LOCATIONS OF EXISTING UNDERGROUND UTILITIES ARE SHOWN IN AN APPROXIMATE WAY ONLY AND HAVE NOT BEEN INDEPENDENTLY VERIFIED BY THE OWNER OR ITS REPRESENTATIVE. THE CONTRACTOR SHALL DETERMINE THE EXACT LOCATION OF ALL EXISTING UTILITIES BEFORE COMMENCING WORK, AND AGREES TO BE FULLY RESPONSIBLE FOR ANY AND ALL DAMAGES WHICH MIGHT BE OCCASIONED BY THE CONTRACTOR'S FAILURE TO EXACTLY LOCATE AND PRESERVE ANY AND ALL UNDERGROUND UTILITIES.

**NOTICE:**
CONSTRUCTION SITE SAFETY IS THE SOLE RESPONSIBILITY OF THE CONTRACTOR. NEITHER OWNER NOR ENGINEER SHALL BE EXPECTED TO ASSUME ANY RESPONSIBILITY FOR SAFETY OF THE WORK, OF PERSONS ENGAGED IN THE WORK, OF ANY NEARBY STRUCTURES, OR OF ANY OTHER PERSONS.

DRAWN BY JRS
PROJECT MANAGER MTA
FIRST ISSUE DATE 07/03/2019
ARCHITECT OF RECORD

SEPI
1 GLENWOOD AVE, SUITE 600
RALEIGH, NC 27603
PHONE 919.789.9977

11020 DAVID TAYLOR DR., SUITE 115
CHARLOTTE, NC 28262
PHONE 704.714.4880

5030 NEW CENTRE DR., SUITE B
WILMINGTON, NC 28403
PHONE 910.523.5715

sepiinc.com

TRANSPORTATION • TRAFFIC • SURVEYING • ENVIRONMENTAL • SITE/CIVIL • INSPECTIONS • CONSTRUCTION MANAGEMENT

PRELIMINARY
NOT FOR
CONSTRUCTION

SUMMIT
DESIGN AND ENGINEERING SERVICES
Creatively Inspired - Technically Executed
License #: P-0339
100 East Six Forks Road, Suite 300
Raleigh, NC 27609
Voice: (919) 322-0115 Fax: (919) 322-0116
www.SummitDE.net

## SITE INVENTORY TABLE

| | |
|---|---|
| PID: | R06600-001-005-012 (LOT 1) |
| | R06600-001-042-000 (LOT 2) |
| | R06600-001-041-000 (LOT 3) |
| | R06600-001-043-000 (LOT 4) |
| ZONING (ALL LOTS): | CB-CD |
| BUILDING SETBACKS | |
| FRONT: | 20 FT |
| SIDE: | 20 FT |
| REAR: | 10 FT |
| AREA OF LOT: | 3.97 ACRES |
| BUILDING SIZE | |
| BRANCH BUILDING: | 8,326 SQ FT |
| REMOTE ATM KIOSK: | 64 SQ FT |
| BUILDING FOOTPRINT | 8,390 SQ FT |
| BRANCH BUILDING: | 10,099 SQ FT |
| REMOTE ATM KIOSK: | 119 SQ FT |
| TOTAL: | 10,218 SQ FT |
| BUILDING LOT COVERAGE | |
| 10,218 SQ FT / 3.97 ACRES: | 5.9% |
| NUMBER OF UNITS: | N/A |
| NUMBER OF BUILDINGS: | 1 |
| BUILDING HEIGHT: | 34 FT |
| PERCENT IMPERVIOUS | |
| PRE DEVELOPMENT: | 0% |
| POST DEVELOPMENT: | 38% (LOT 1) |
| PARKING(SPACES): | |
| REQUIRED: | 21 |
| MAX 150%OF REQ: | 42 |
| PROVIDED | |
| STANDARD: | 48 |
| HANDICAP: | 2 |
| TOTAL: | 50 |
| CAMA LAND CLASSIFICATION: | URBAN |
| CAMA AEC AND SETBACKS: | NONE |
| HISTORICAL OR ARCHAEOLOGICAL SITES: | NONE |
| WETLANDS: | NONE |
| CONSERVATION AREAS: | NONE |
| WATER HIGH WATER LINE: | NONE |
| RIVER BASIN: | BARNARD'S CREEK |
| EXISTING OR PROPOSED THOROUGHFARES: | CAPE FEAR RIVER |
| BIKE ROUTES: | NONE |
| SIDEWALKS/GREENWAYS/TRAILS: | ACCESS TOWN |
| TRANSIT FACILITIES: | NONE |
| SOIL TYPE: LEON SAND;MUR;VILLERFNE SAND;RIMIN SAND,) 1 TO 6 PERCENT SLOPES | |

## ENGINEER NOTES

1. PRIOR TO ANY CLEARING, GRADING OR CONSTRUCTION ACTIVITY, TREE PROTECTION FENCING SHALL BE INSTALLED AROUND WORKERS, TOOLS, MATERIALS OR VEHICLES ARE PERMITTED WITHIN THE TREE PROTECTION FENCING.
2. ANY TREES AND/OR AREAS DESIGNATED TO BE PROTECTED MUST BE PROPERLY BARRICADED WITH FENCING AND PROTECTED THROUGHOUT CONSTRUCTION TO ENSURE THAT NO CLEARING, GRADING OR STAGING OF MATERIALS WILL OCCUR IN THOSE AREAS.
3. NO EQUIPMENT IS ALLOWED ON SITE UNTIL ALL TREE PROTECTION FENCING AND SILT FENCING IS INSTALLED AND APPROVED. PROTECTIVE FENCING IS TO BE MAINTAINED THROUGHOUT THE DURATION OF THE PROJECT. CONTRACTORS SHALL RECEIVE ADEQUATE INSTRUCTION ON TREE PROTECTION METHODS.
4. ALL PAVEMENT MARKINGS IN PUBLIC RIGHTS-OF-WAY AND FOR DRIVEWAYS ARE TO BE THERMOPLASTIC AND MEET CITY AND/OR NCDOT STANDARDS.
5. ONCE STREETS ARE OPEN TO TRAFFIC, CONTACT TRAFFIC ENGINEERING REGARDING THE INSTALLATION OF TRAFFIC AND STREET NAME SIGNS. PROPOSED STREET NAMES MUST BE APPROVED PRIOR TO INSTALLATION OF STREET NAME SIGNS.
6. TRAFFIC CONTROL DEVICES (INCLUDING SIGNS AND PAVEMENT MARKINGS) IN AREAS OPEN TO PUBLIC TRAFFIC ARE TO MEET MUTCD (MANUAL ON UNIFORM TRAFFIC CONTROL DEVICES) STANDARDS.
7. CONTACT TRAFFIC ENGINEERING AT 910-341-7888 TO ENSURE THAT ALL TRAFFIC SIGNAL FACILITIES AND EQUIPMENT ARE SHOWN ON THE PLAN.
8. CALL TRAFFIC ENGINEERING AT 910-341-7888 FORTY-EIGHT (48) HOURS PRIOR TO ANY EXCAVATION IN THE RIGHT-OF-WAY.
9. TRAFFIC ENGINEERING MUST APPROVE OF PAVEMENT MARKING PRIOR TO ACTUAL STRIPING.
10. ALL PARKING STALL MARKINGS AND LANE ARROWS WITHIN THE PARKING AREAS SHALL BE WHITE.
11. ALL TRAFFIC CONTROL SIGNS AND MARKINGS OFF THE RIGHT-OF-WAY ARE TO BE MAINTAINED BY THE PROPERTY OWNER.
12. VOLUNTEERS AND STREET SIGNS TO REMAIN IN PLACE DURING CONSTRUCTION
13. TACTILE WARNING MATS WILL BE INSTALLED ON ALL WHEELCHAIR RAMPS.
14. A UTILITY CUT PERMIT IS REQUIRED FOR EACH OPEN CUT OF A CITY STREET.
15. ANY BROKEN OR MISSING SIDEWALK PANELS WILL BE REPLACED.
16. CONTACT KAREN DIXON AT 910-341-7888 TO DISCUSS STREET LIGHTING OPTIONS.
17. WATER AND SEWER SERVICE SHALL MEET CAPE FEAR PUBLIC UTILITY AUTHORITY (CFPUA) DETAILS AND SPECIFICATIONS.
18. PROJECT SHALL COMPLY WITH CFPUA CROSS CONNECTION CONTROL REQUIREMENTS. WATER METER(S) CANNOT BE RELEASED UNTIL ALL REQUIREMENTS ARE MET AND THE STATE HAS GIVEN THEIR FINAL APPROVAL. CALL 910-343-3910 FOR INFORMATION.
19. IF THE CONTRACTOR DESIRES CFPUA WATER FOR CONSTRUCTION PURPOSES, A TEMPORARY FIRE SERVICE AND MUST PROVIDE A REDUCED PRESSURE ZONE (RPZ) BACKFLOW PREVENTION DEVICE ON THE DEVELOPER'S SIDE OF THE WATER METER BOX.
20. ANY IRRIGATION SYSTEM SUPPLIED BY CFPUA WATER SHALL COMPLY WITH THE CFPUA CROSS CONNECTION CONTROL REGULATIONS. CALL 919-343-3910 FOR INFORMATION.
21. ANY IRRIGATION SYSTEM SHALL BE EQUIPPED WITH A RAIN AND FREEZER SENSOR.
22. ANY BACKFLOW PREVENTION DEVICES REQUIRED BY THE CFPUA WILL NEED TO BE ON THE LIST OF APPROVED DEVICES BY USCFCCCHR OR ASSE.
23. CONTRACTOR TO FIELD VERIFY EXISTING WATER AND SEWER SERVICE LOCATIONS, SIZES AND MATERIALS PRIOR TO CONSTRUCTION. ENGINEER TO BE NOTIFIED OF ANY CONFLICTS.
24. EMERGENCY VEHICLES SHALL HAVE UNHINDERED ACCESS FOR EMERGENCY VEHICLES AT ALL TIMES DURING CONSTRUCTION.
25. UNDERGROUND FIRE LINES REQUIRE A PERMIT FROM THE PUBLIC RIGHT-OF-WAY TO THE BUILDING. CONTACT THE WILMINGTON FIRE DEPARTMENT DIVISION OF FIRE AND LIFE SAFETY AT 910-341-0696.
26. NO OBSTRUCTIONS ARE PERMITTED IN THE SPACE BETWEEN THIRTY (30) INCHES AND TEN (10) FEET ABOVE THE GROUND WITHIN THE TRIANGULAR SIGHT DISTANCE.
27. CONTACT THE NORTH CAROLINA ONE CALL CENTER AT 1.800.632.4949 PRIOR TO DOING ANY DIGGING, CLEARING, OR GRADING
28. DRIVEWAY DESIGN MATCHES EXISTING CONDITIONS AND DOES NOT CONFORM TO CITY STANDARDS
29. NO STREET INTERSECTIONS WITHIN 500' OF SITE
30. THE MAXIMUM HEIGHT AND AREA OF THE MAIN SIGN ON 17TH STREET IS 20 FEET AND 50 SQUARE FEET RESPECTIVELY.
31. ALL RADII ARE FACE OF CURB.

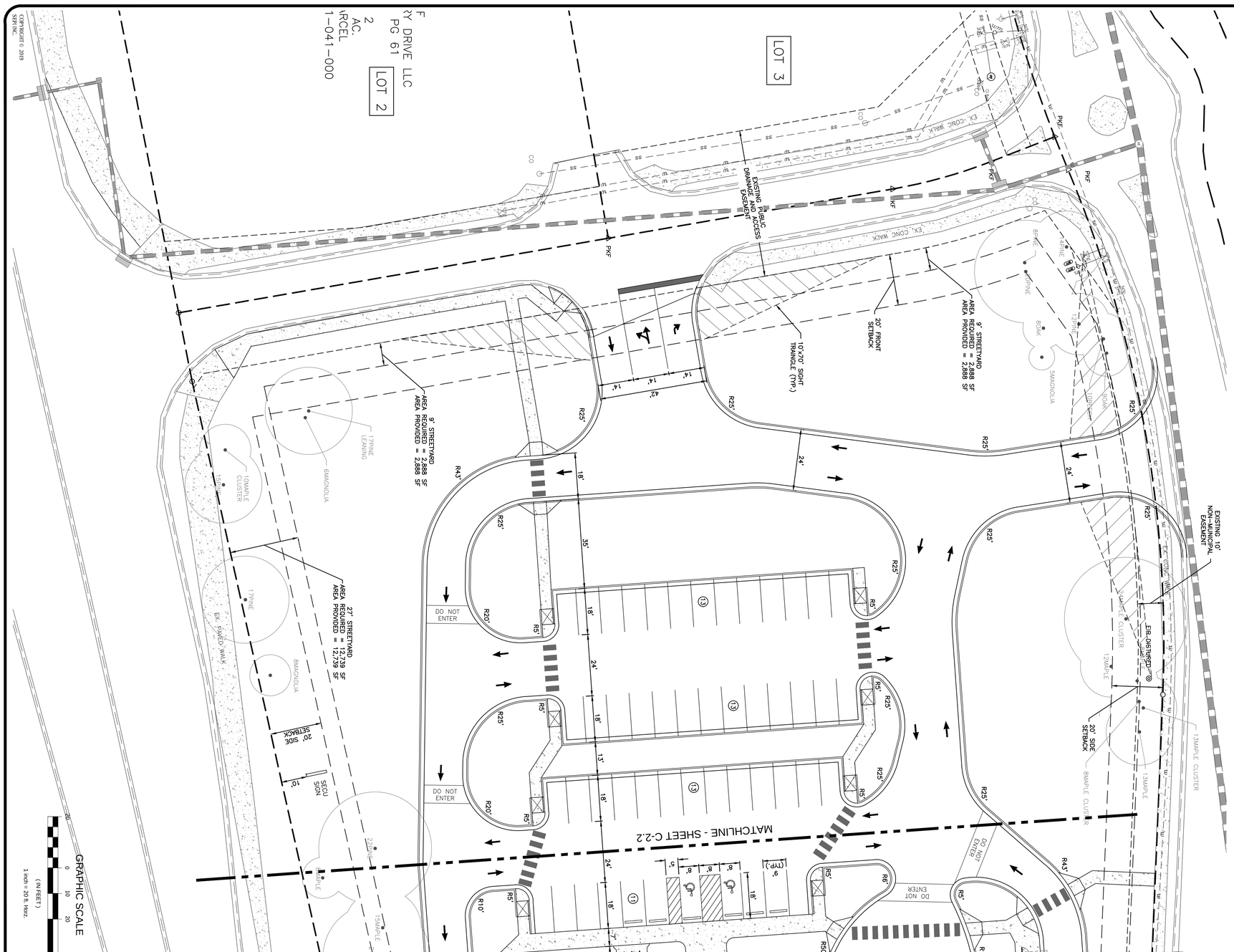


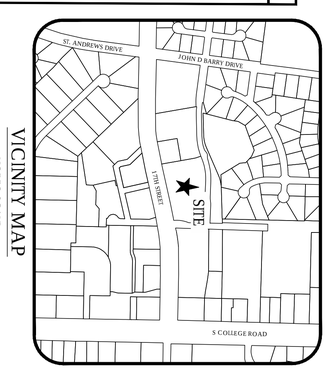


COPYRIGHT © 2019
SEPI INC.

PROJECT
**STATE EMPLOYEES' CREDIT UNION**
ADDRESS:
4355 S 17TH STREET
WILMINGTON NC 28412
**SITE LAYOUT PLAN**

PROJECT NO.
**SE18.191.00**
SHEET NO.
**C-2.1**

OWNER/DEVELOPER/APPLICANT
**STATE EMPLOYEES' CREDIT UNION**
ADDRESS:
119 N. SALISBURY STREET
RALEIGH, NORTH CAROLINA 27603
PHONE: 919-839-5300

811 Know what's **below.** **Call** before you dig.
3 WORKING DAYS BEFORE YOU DIG
FOR THE LOCATION OF UNDERGROUND FACILITIES

THE LOCATIONS OF EXISTING UNDERGROUND UTILITIES ARE SHOWN IN AN APPROXIMATE WAY ONLY AND HAVE NOT BEEN INDEPENDENTLY VERIFIED BY THE OWNER OR ITS REPRESENTATIVE. THE CONTRACTOR SHALL DETERMINE THE EXACT LOCATION OF ALL EXISTING UTILITIES BEFORE COMMENCING WORK, AND AGREES TO BE FULLY RESPONSIBLE FOR ANY AND ALL DAMAGES WHICH MIGHT BE OCCASIONED BY THE CONTRACTOR'S FAILURE TO EXACTLY LOCATE AND PRESERVE ANY AND ALL UNDERGROUND UTILITIES.
NOTICE:
CONSTRUCTION SITE SAFETY IS THE SOLE RESPONSIBILITY OF THE CONTRACTOR. NEITHER THE OWNER NOR THE ENGINEER SHALL BE EXPECTED TO ASSUME ANY RESPONSIBILITY FOR SAFETY OF THE WORK, OF PERSONS ENGAGED IN THE WORK, OF ANY NEARBY STRUCTURES, OR OF ANY OTHER PERSONS.

ARCHITECT OF RECORD
PROJECT MANAGER MTA
DRAWN BY JRS
FIRST ISSUE DATE 07/03/2019

SEPI
1 GLENWOOD AVE, SUITE 600
RALEIGH, NC 27603
PHONE 919.789.9977
11020 DAVID TAYLOR DR., SUITE 115
CHARLOTTE, NC 28262
PHONE 704.714.4880
5030 NEW CENTRE DR., SUITE B
WILMINGTON, NC 28403
PHONE 910.523.5715
sepiinc.com
TRANSPORTATION • TRAFFIC • SURVEYING • ENVIRONMENTAL • SITE/CIVIL • INSPECTIONS • CONSTRUCTION MANAGEMENT

PRELIMINARY NOT FOR CONSTRUCTION

SUMMIT DESIGN AND ENGINEERING SERVICES
Creatively Inspired - Technically Executed
License #: P-0339
100 East Six Forks Road, Suite 300
Raleigh, NC 27609
Voice: (919) 322-0115 Fax: (919) 322-0116
www.SummitDE.net

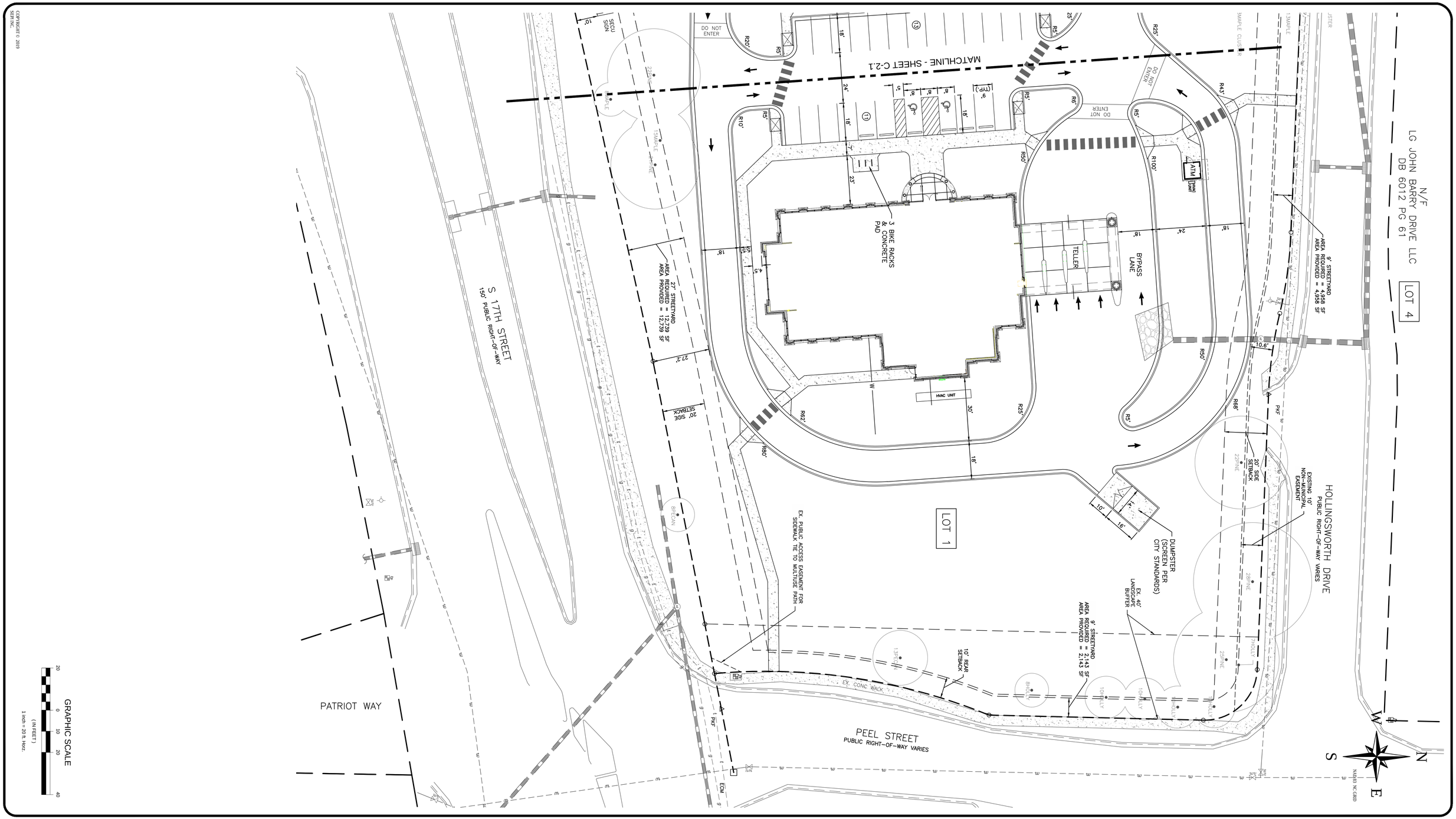


COPYRIGHT © 2019
SEPI, INC.

PROJECT NO.
**SE18.191.00**

SHEET NO.
**C-2.2**

**PROJECT**
# STATE EMPLOYEES' CREDIT UNION
**ADDRESS:**
**4355 S 17TH STREET**
**WILMINGTON NC 28412**

## SITE LAYOUT PLAN

**OWNER/DEVELOPER/APPLICANT**
**STATE EMPLOYEES' CREDIT UNION**

**ADDRESS:**
**119 N. SALISBURY STREET**
**RALEIGH, NORTH CAROLINA 27603**
**PHONE: 919-839-5300**

811
Know what's **below.**
**Call** before you dig.
3 WORKING DAYS
BEFORE YOU DIG
FOR THE LOCATION OF UNDERGROUND FACILITIES.

*THE LOCATIONS OF EXISTING UNDERGROUND UTILITIES ARE SHOWN IN AN APPROXIMATE WAY ONLY AND HAVE NOT BEEN INDEPENDENTLY VERIFIED BY THE OWNER OR ITS REPRESENTATIVE. THE CONTRACTOR SHALL DETERMINE THE EXACT LOCATION OF ALL EXISTING UTILITIES BEFORE COMMENCING WORK. HE AGREES TO BE FULLY RESPONSIBLE FOR ANY AND ALL DAMAGES WHICH MIGHT BE OCCASIONED BY THE CONTRACTOR'S FAILURE TO EXACTLY LOCATE AND PRESERVE ANY AND ALL UNDERGROUND UTILITIES.*

NOTICE:
*CONSTRUCTION SITE SAFETY IS THE SOLE RESPONSIBILITY OF THE CONTRACTOR. NEITHER THE OWNER NOR THE ENGINEER SHALL BE EXPECTED TO ASSUME ANY RESPONSIBILITY FOR SAFETY OF THE WORK, OF PERSONS ENGAGED IN THE WORK, OF ANY NEARBY STRUCTURES, OR OF ANY OTHER PERSONS.*

| | |
|---|---|
| ARCHITECT OF RECORD | |
| PROJECT MANAGER | MTA |
| DRAWN BY | JRS |
| FIRST ISSUE DATE | 07/03/2019 |

SEPI
1 GLENWOOD AVE, SUITE 600
RALEIGH, NC 27603
PHONE 919.789.9977

11020 DAVID TAYLOR DR., SUITE 115
CHARLOTTE, NC 28262
PHONE 704.714.4880

5030 NEW CENTRE DR., SUITE B
WILMINGTON, NC 28403
PHONE 910.523.5715

sepiinc.com

TRANSPORTATION • TRAFFIC • SURVEYING • ENVIRONMENTAL • SITE/CIVIL • INSPECTIONS • CONSTRUCTION MANAGEMENT

PRELIMINARY
NOT FOR CONSTRUCTION

SUMMIT
DESIGN AND ENGINEERING SERVICES
Creatively Inspired - Technically Executed
License #: P-0339
100 East Six Forks Road, Suite 300
Raleigh, NC 27609
Voice: (919) 322-0115 Fax: (919) 322-0116
www.SummitDE.net

## SITE INVENTORY TABLE

| | |
|---|---|
| IMPERVIOUS AREA | |
| EXISTING: | 0 SQ FT |
| PROPOSED: | 1.5 ACRES |
| PERCENTAGE: | 65,500 SQ FT |
| | 38% |
| DISTURBANCE AREA | |
| PROPOSED: | 3.4 ACRES |
| | 148,237 SQ FT |
| PERCENTAGE: | 86% |
| TREE CALCULATIONS: | |
| MIN PROPOSED: | 48 |

GRAPHIC SCALE
20 0 10 20 40
(IN FEET)
1 inch = 20 ft. Horz.

COPYRIGHT © 2019
SEPI, INC.

PROJECT NO.
**SE18.191.00**
SHEET NO.
**C-3.1**

PROJECT
# STATE EMPLOYEES' CREDIT UNION
**ADDRESS:**
**4355 S 17TH STREET**
**WILMINGTON NC 28412**

**EROSION CONTROL GRADING AND STORMWATER PLAN**

OWNER/DEVELOPER/APPLICANT
**STATE EMPLOYEES' CREDIT UNION**

**ADDRESS:**
**119 N. SALISBURY STREET**
**RALEIGH, NORTH CAROLINA 27603**
**PHONE: 919-839-5300**

811
Know what's **below.**
**Call** before you dig.
3 WORKING DAYS
BEFORE YOU DIG
FOR THE LOCATION OF
UNDERGROUND FACILITIES.

THE LOCATIONS OF EXISTING UNDERGROUND UTILITIES ARE SHOWN IN AN APPROXIMATE WAY ONLY AND HAVE NOT BEEN INDEPENDENTLY VERIFIED BY THE OWNER OR ITS REPRESENTATIVE. THE CONTRACTOR SHALL DETERMINE THE EXACT LOCATION OF ALL EXISTING UTILITIES BEFORE COMMENCING WORK, AND AGREES TO BE FULLY RESPONSIBLE FOR ANY AND ALL DAMAGES WHICH MIGHT BE OCCASIONED BY THE CONTRACTOR'S FAILURE TO EXACTLY LOCATE AND PRESERVE ANY AND ALL UNDERGROUND UTILITIES.

NOTICE:
CONSTRUCTION SITE SAFETY IS THE SOLE RESPONSIBILITY OF THE CONTRACTOR. NEITHER THE OWNER NOR THE ENGINEER SHALL BE EXPECTED TO ASSUME ANY RESPONSIBILITY FOR SAFETY OF THE WORK, OF PERSONS ENGAGED IN THE WORK, OF ANY NEARBY STRUCTURES, OR OF ANY OTHER PERSONS.

ARCHITECT OF RECORD
PROJECT MANAGER
MTA
DRAWN BY
JRS
FIRST ISSUE DATE
07/03/2019

SEPI
1 GLENWOOD AVE, SUITE 600
RALEIGH, NC 27603
PHONE 919.789.9977

11020 DAVID TAYLOR DR., SUITE 115
CHARLOTTE, NC 28262
PHONE 704.714.4880

5030 NEW CENTRE DR., SUITE B
WILMINGTON, NC 28403
PHONE 910.523.5715

sepiinc.com

TRANSPORTATION • TRAFFIC • SURVEYING • ENVIRONMENTAL • SITE/CIVIL • INSPECTIONS • CONSTRUCTION MANAGEMENT

PRELIMINARY
NOT FOR
CONSTRUCTION

SUMMIT
DESIGN AND ENGINEERING SERVICES
Creatively Inspired - Technically Executed
License #: P-0339
100 East Six Forks Road, Suite 300
Raleigh, NC 27609
Voice: (919) 322-0115 Fax: (919) 322-0116
www.SummitDE.net

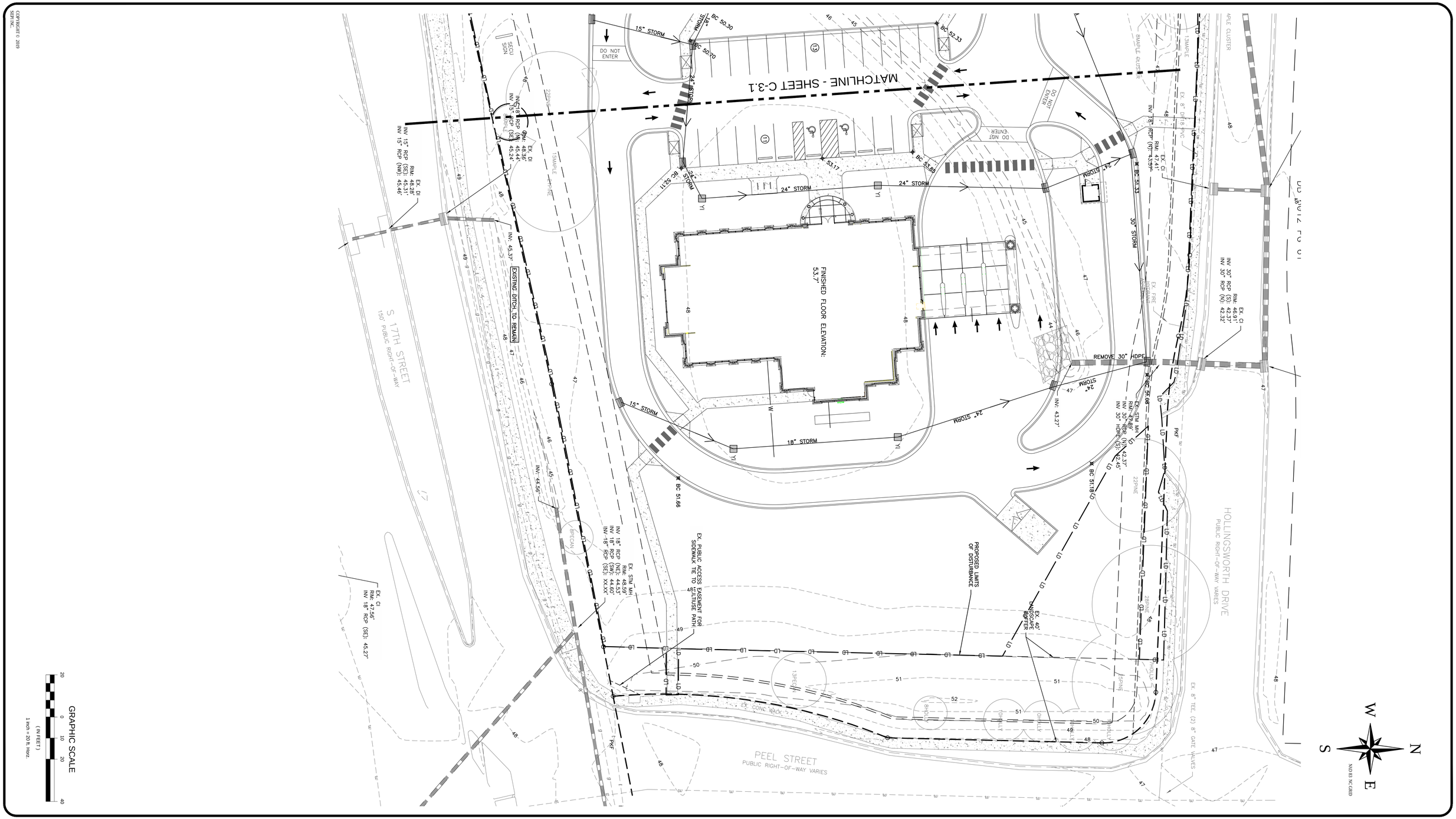


COPYRIGHT © 2019
SEPI INC.

PROJECT NO.
**SE18.191.00**

SHEET NO.
**C-3.2**

**PROJECT**
# STATE EMPLOYEES' CREDIT UNION
**ADDRESS:**
**4355 S 17TH STREET**
**WILMINGTON NC 28412**

## EROSION CONTROL GRADING AND STORMWATER PLAN

**OWNER/DEVELOPER/APPLICANT**
## STATE EMPLOYEES' CREDIT UNION
**ADDRESS:**
**119 N. SALISBURY STREET**
**RALEIGH, NORTH CAROLINA 27603**
**PHONE: 919-839-5300**

811
Know what's **below.**
**Call** before you dig.
3 WORKING DAYS
BEFORE YOU DIG
FOR THE LOCATION OF
UNDERGROUND FACILITIES.

THE LOCATIONS OF EXISTING UNDERGROUND UTILITIES ARE SHOWN IN AN APPROXIMATE WAY ONLY AND HAVE NOT BEEN INDEPENDENTLY VERIFIED BY THE OWNER OR ITS REPRESENTATIVE. THE CONTRACTOR SHALL DETERMINE THE EXACT LOCATION OF ALL EXISTING UTILITIES BEFORE COMMENCING WORK, AND AGREES TO BE FULLY RESPONSIBLE FOR ANY AND ALL DAMAGES WHICH MIGHT BE OCCASIONED BY THE CONTRACTOR'S FAILURE TO EXACTLY LOCATE AND PRESERVE ANY AND ALL UNDERGROUND UTILITIES.

NOTICE:
CONSTRUCTION SITE SAFETY IS THE SOLE RESPONSIBILITY OF THE CONTRACTOR. NEITHER THE OWNER NOR THE ENGINEER SHALL BE EXPECTED TO ASSUME ANY RESPONSIBILITY FOR SAFETY OF THE WORK, OF PERSONS ENGAGED IN THE WORK, OF ANY NEARBY STRUCTURES, OR OF ANY OTHER PERSONS.

ARCHITECT OF RECORD
PROJECT MANAGER
MTA
DRAWN BY
JRS
FIRST ISSUE DATE
07/03/2019

SEPI
1 GLENWOOD AVE, SUITE 600
RALEIGH, NC 27603
PHONE 919.789.9977

11020 DAVID TAYLOR DR., SUITE 115
CHARLOTTE, NC 28262
PHONE 704.714.4880

5030 NEW CENTRE DR., SUITE B
WILMINGTON, NC 28403
PHONE 910.523.5715

sepiinc.com

TRANSPORTATION • TRAFFIC • SURVEYING • ENVIRONMENTAL • SITE/CIVIL • INSPECTIONS • CONSTRUCTION MANAGEMENT

PRELIMINARY
NOT FOR
CONSTRUCTION

SUMMIT
DESIGN AND ENGINEERING SERVICES
Creatively Inspired - Technically Executed
License #: P-0339
100 East Six Forks Road, Suite 300
Raleigh, NC 27609
Voice: (919) 322-0115 Fax: (919) 322-0116
www.SummitDE.net

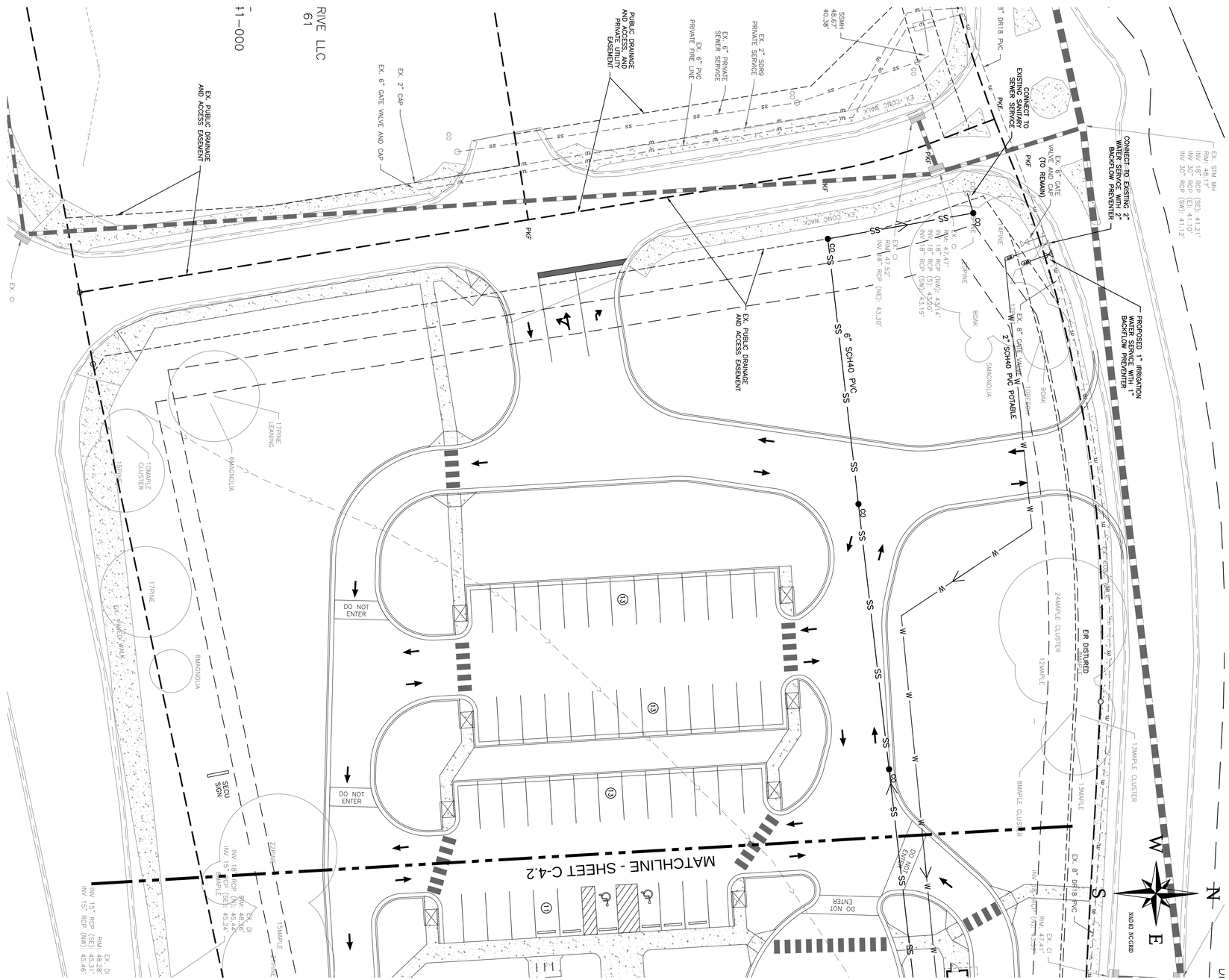
CONNECT TO EXISTING 2" WATER SERVICE WITH 2" BACKFLOW PREVENTER
PROPOSED 1" IRRIGATION WATER SERVICE WITH 1" BACKFLOW PREVENTER
CONNECT TO EXISTING SANITARY SEWER SERVICE
EX. 6" GATE VALVE AND CAP (TO REMAIN)
EX. 8" GATE VALVE W
2" SCH40 PVC POTABLE
6" SCH40 PVC
EX. PUBLIC DRAINAGE AND ACCESS EASEMENT
PUBLIC DRAINAGE AND ACCESS AND PRIVATE UTILITY EASEMENT
EX. 6" PRIVATE SEWER SERVICE
EX. 6" PVC PRIVATE FIRE LINE
EX. 2" SCR9 PRIVATE SERVICE
EX. 2" CAP
EX. 6" GATE VALVE AND CAP
EX. PUBLIC DRAINAGE AND ACCESS EASEMENT
RIVE LLC
61
11-000
MATCHLINE - SHEET C-4.2
DO NOT ENTER
SECU SIGN
EX. DI
EX. CI
EX. STM MH
EX. DI
EX. CI
EX. DI
EX. CI
EX. DI
EX. CI

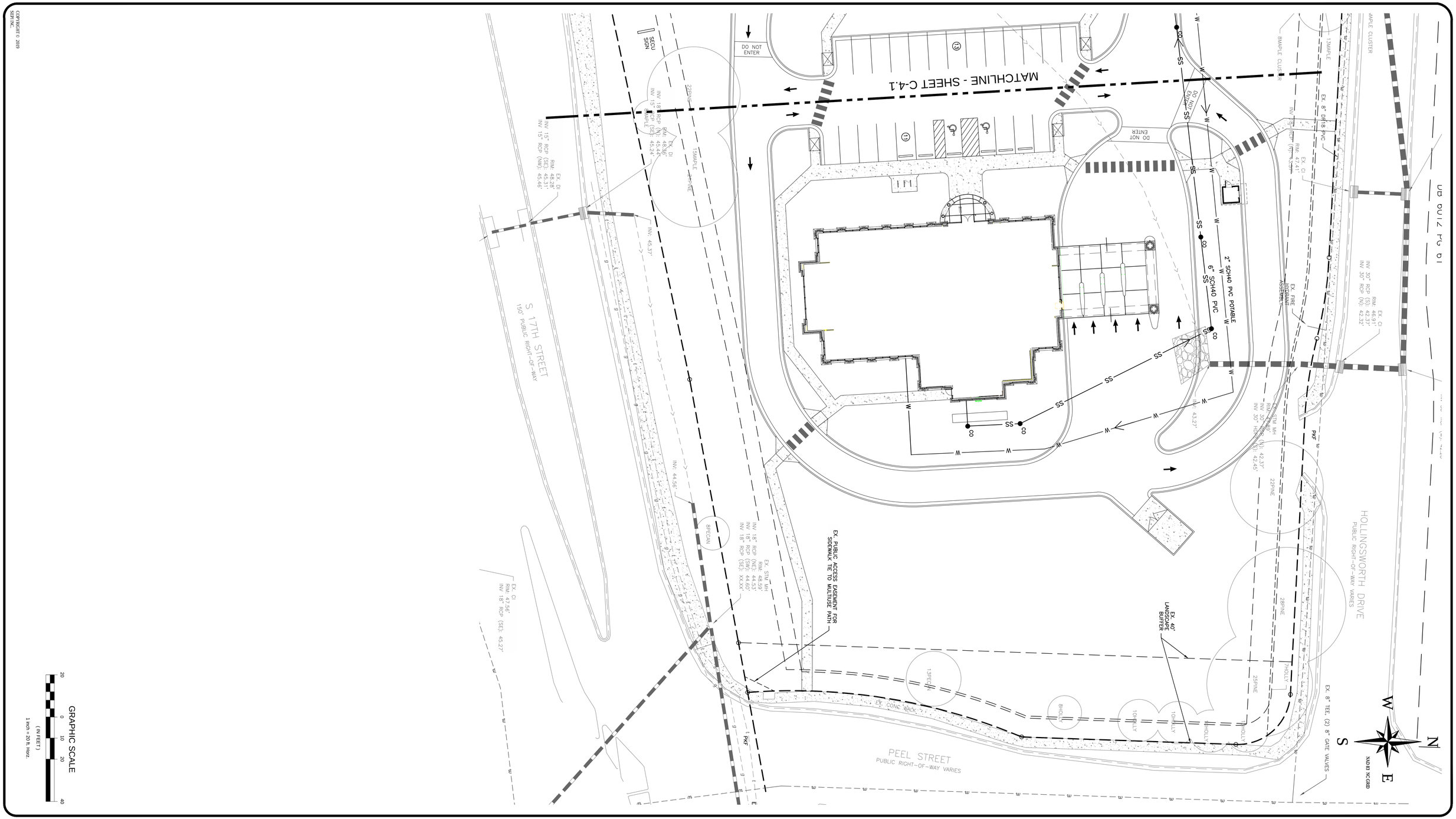


COPYRIGHT © 2019
SEPI, INC.

PROJECT
**STATE EMPLOYEES' CREDIT UNION**
ADDRESS:
4355 S 17TH STREET
WILMINGTON NC 28412

**UTILITY PLAN**

PROJECT NO.
**SE18.191.00**
SHEET NO.
**C-4.2**

OWNER/DEVELOPER/APPLICANT
**STATE EMPLOYEES' CREDIT UNION**

ADDRESS:
119 N. SALISBURY STREET
RALEIGH, NORTH CAROLINA 27603
PHONE: 919-839-5300

811
Know what's **below.**
**Call** before you dig.
3 WORKING DAYS
BEFORE YOU DIG
FOR THE LOCATION OF
UNDERGROUND FACILITIES

THE LOCATIONS OF EXISTING UNDERGROUND UTILITIES ARE SHOWN IN AN APPROXIMATE WAY ONLY AND HAVE NOT BEEN INDEPENDENTLY VERIFIED BY THE OWNER OR ITS REPRESENTATIVE. THE CONTRACTOR SHALL DETERMINE THE EXACT LOCATION OF ALL EXISTING UTILITIES BEFORE COMMENCING WORK, AND AGREES TO BE FULLY RESPONSIBLE FOR ANY AND ALL DAMAGES WHICH MIGHT BE OCCASIONED BY THE CONTRACTOR'S FAILURE TO EXACTLY LOCATE AND PRESERVE ANY AND ALL UNDERGROUND UTILITIES.

**NOTICE:**
CONSTRUCTION SITE SAFETY IS THE SOLE RESPONSIBILITY OF THE CONTRACTOR. NEITHER THE OWNER NOR ENGINEER SHALL BE EXPECTED TO ASSUME ANY RESPONSIBILITY FOR SAFETY OF THE WORK, OF PERSONS ENGAGED IN THE WORK, OF ANY NEARBY STRUCTURES, OR OF ANY OTHER PERSONS.

DRAWN BY JKS
PROJECT MANAGER MTA
FIRST ISSUE DATE 07/03/2019
ARCHITECT OF RECORD

SEPI
1 GLENWOOD AVE, SUITE 600
RALEIGH, NC 27603
PHONE 919.789.9977

11020 DAVID TAYLOR DR., SUITE 115
CHARLOTTE, NC 28262
PHONE 704.714.4880

5030 NEW CENTRE DR., SUITE B
WILMINGTON, NC 28403
PHONE 910.523.5715

sepiinc.com

TRANSPORTATION • TRAFFIC • SURVEYING • ENVIRONMENTAL • SITE/CIVIL • INSPECTIONS • CONSTRUCTION MANAGEMENT

PRELIMINARY
NOT FOR CONSTRUCTION
SEPI ENGINEERING & CONSTRUCTION, INC.
PROFESSIONAL ENGINEER SEAL
NORTH CAROLINA
C-2497

SUMMIT
DESIGN AND ENGINEERING SERVICES
Creatively Inspired - Technically Executed
License #: P-0339
100 East Six Forks Road, Suite 300
Raleigh, NC 27609
Voice: (919) 322-0115 Fax: (919) 322-0116
www.SummitDE.net

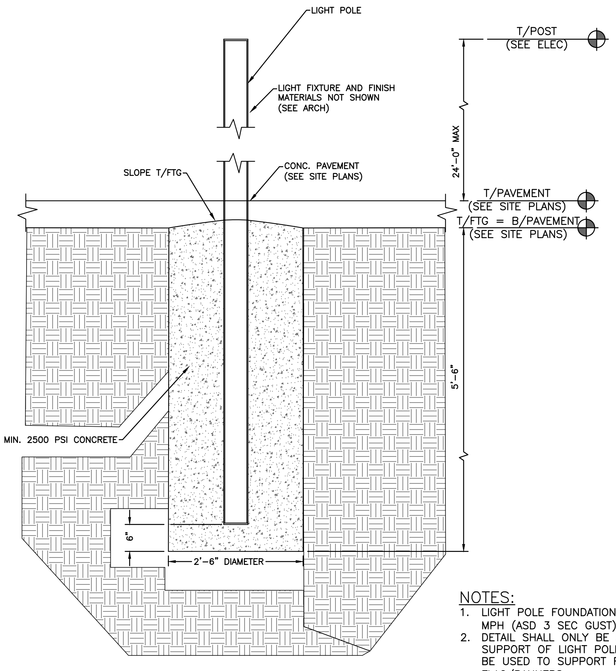


NOTES:
1. LIGHT POLE FOUNDATION DESIGNED TO 115 MPH (ASD 3 SEC GUST)
2. DETAIL SHALL ONLY BE USED FOR THE SUPPORT OF LIGHT POLES AND SHALL NOT BE USED TO SUPPORT FLAG POLES OR FLAG/BANNERS

TYPICAL LIGHT POLE FOUNDATION (ALT B)

NOT TO SCALE

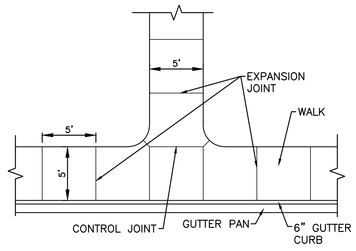


SIDEWALK INTERSECTION

NOT TO SCALE

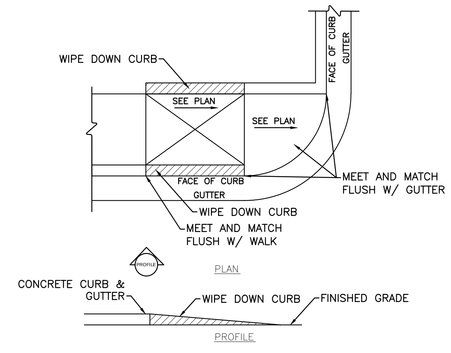


ACCESSIBLE RAMP SIDEWALK TERMINUS

NOT TO SCALE

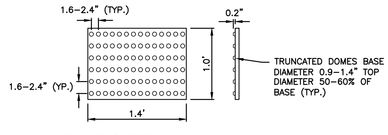


WARNING DOME NOTES:
1. USE CONTRASTING COLORS, RED OR BLACK ON WHITE PAVEMENT..
2. USE CAST IN PLACE PAVERS FOR NEW CONSTRUCTION.
3. RUBBER MATS ARE PERMITTED FOR RETROFITS.
4. LANDING AND RAMP WIDTH MAY BE REDUCED TO 3' WHERE SPACE IS LIMITED AND DESIGN IS APPROVED BY THE CITY ENGINEER.

WARNING DOMES DETAIL

NOT TO SCALE

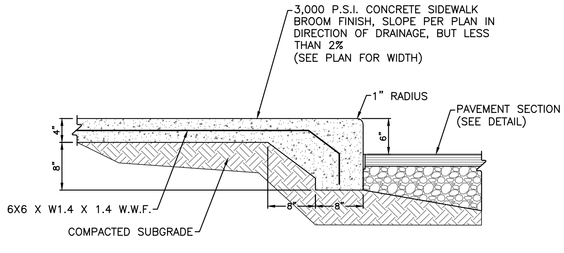


TURN-DOWN SIDEWALK DETAIL

NOT TO SCALE

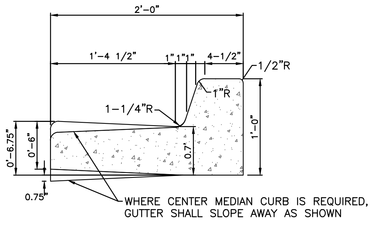


STANDARD 6" CURB SECTION

NOT TO SCALE

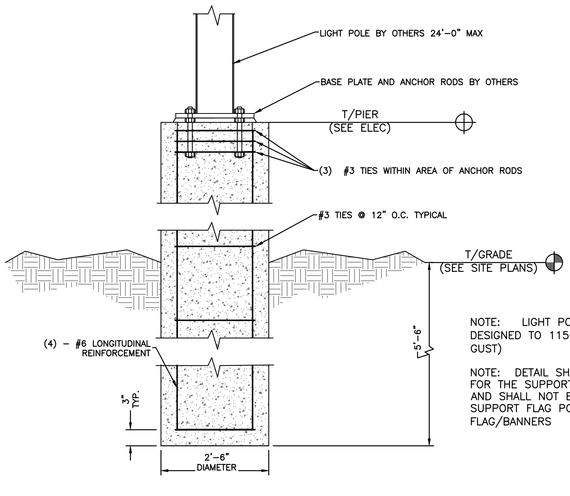


NOTE: LIGHT POLE FOUNDATION DESIGNED TO 115 MPH (ASD 3 SEC GUST)

NOTE: DETAIL SHALL ONLY BE USED FOR THE SUPPORT OF LIGHT POLES AND SHALL NOT BE USED TO SUPPORT FLAG POLES OR FLAG/BANNERS

TYPICAL LIGHT POLE FOUNDATION (ALT A)

NOT TO SCALE

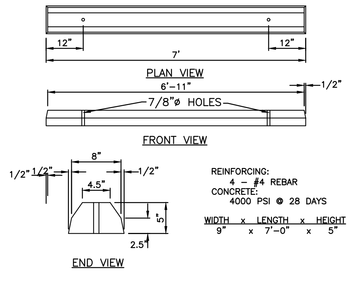


REINFORCING:
4 - #4 REBAR
CONCRETE:
4000 PSI @ 28 DAYS

| WIDTH | x | LENGTH | x | HEIGHT |
|---|---|---|---|---|
| 9" | x | 7'-0" | x | 5" |

WHEEL STOP DETAIL

NOT TO SCALE

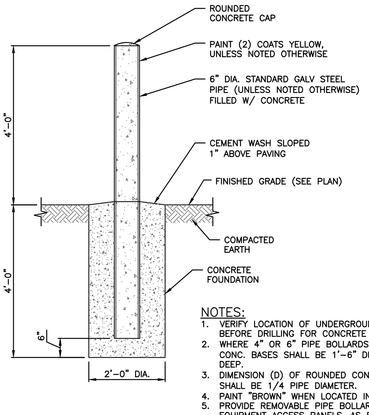


NOTES:
1. VERIFY LOCATION OF UNDERGROUND UTILITIES BEFORE DRILLING FOR CONCRETE FOUNDATION.
2. WHERE 4" OR 6" PIPE BOLLARDS ARE SPECIFIED, CONC. BASES SHALL BE 1'-6" DIA. BY 3'-0" DEEP.
3. DIMENSION (D) OF ROUNDED CONCRETE CAP SHALL BE 1/4 PIPE DIAMETER.
4. PAINT "BROWN" WHEN LOCATED IN PLANTER.
5. PROVIDE REMOVABLE PIPE BOLLARDS AT EQUIPMENT ACCESS PANELS, AS REQUIRED.

EXTERIOR PIPE BOLLARD

NOT TO SCALE

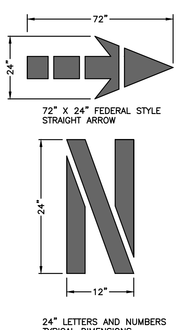


PAVEMENT MARKINGS
ARROW SYMBOLS

NOT TO SCALE

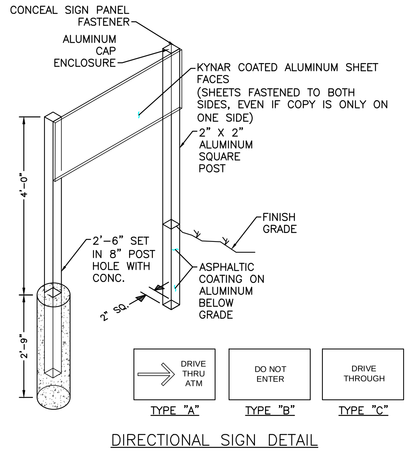


DIRECTIONAL SIGN DETAIL

NOT TO SCALE

COPYRIGHT © 2019
SEPI INC.

SUMMIT DESIGN AND ENGINEERING SERVICES
Creatively Inspired - Technically Executed
License #: P-0339
100 East Six Forks Road, Suite 300
Raleigh, NC 27609
Voice: (919) 322-0115 Fax: (919) 322-0116
www.SummitDE.net

PRELIMINARY NOT FOR CONSTRUCTION

SEPI
1 GLENWOOD AVE., SUITE 600
RALEIGH, NC 27603
PHONE 919.789.9977
11020 DAVID TAYLOR DR., SUITE 115
CHARLOTTE, NC 28262
PHONE 704.714.4880
5030 NEW CENTRE DR., SUITE B
WILMINGTON, NC 28403
PHONE 910.523.5715
sepiinc.com
TRANSPORTATION•TRAFFIC•SURVEYING•ENVIRONMENTAL•SITE/CIVIL•INSPECTIONS•CONSTRUCTION MANAGEMENT

ARCHITECT OF RECORD

PROJECT MANAGER
MTA

DRAWN BY JRS
FIRST ISSUE DATE 07/03/2019

THE LOCATIONS OF EXISTING UNDERGROUND UTILITIES SHOWN ARE APPROXIMATE EVEN IN THE CASE OF UTILITIES ERECTED BY THIS ENGINEER. THE CONTRACTOR SHALL DETERMINE THE EXACT LOCATION OF ALL EXISTING UTILITIES BEFORE BEGINNING HIS OPERATIONS. HE SHALL BE RESPONSIBLE FOR ANY DAMAGE TO UTILITIES OR PROPERTY CAUSED BY HIS OPERATIONS AND SHALL ASSUME FULL RESPONSIBILITY FOR MAINTENANCE OF SERVICE TO UTILITIES CONNECTED TO OR CONTRACTED TO BE CONNECTED TO THE UTILITIES SHOWN ON THE PLANS AND TO THOSE NOT SHOWN OR LOCATED IN THE VICINITY OF THE WORK SITE.

811 Know what's below. Call before you dig. 3 WORKING DAYS BEFORE YOU DIG
NOTICE: THE LOCATIONS OF UNDERGROUND UTILITIES SHOWN ON THIS PLAN WERE DETERMINED BY EXPERIENCED PERSONNEL BUT ARE NOT GUARANTEED TO BE ACCURATE. THE CONTRACTOR SHALL BE RESPONSIBLE FOR DETERMINING THE ACTUAL LOCATION OF ALL UTILITIES AND SHALL BE RESPONSIBLE FOR ANY DAMAGE TO UTILITIES OR PROPERTY CAUSED BY HIS OPERATIONS.

OWNER/DEVELOPER/APPLICANT
STATE EMPLOYEES' CREDIT UNION
ADDRESS:
119 N. SALISBURY STREET
RALEIGH, NORTH CAROLINA 27603
PHONE: 919-839-5300

PROJECT
STATE EMPLOYEES' CREDIT UNION
ADDRESS:
4355 S 17TH STREET
WILMINGTON NC 28412

SITE DETAILS

PROJECT NO.
SE18.191.00

SHEET NO.
C-5.1

X:\2018\SE18.191.00 SECU - Wilmington South 17th Street Branch\Design\Details\Standard Details.dwg PLOTTED: 7/3/2019 10:09 AM BY: JOHN SCOTT

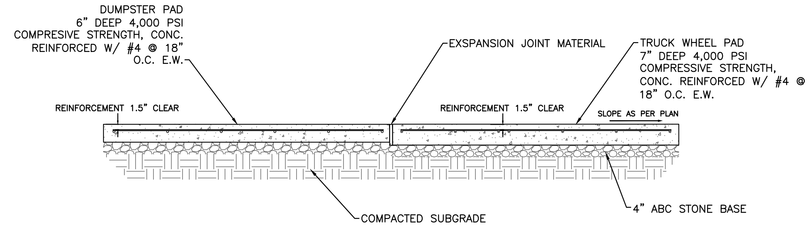


DUMPSTER AND WHEEL PAD DETAIL

NOT TO SCALE

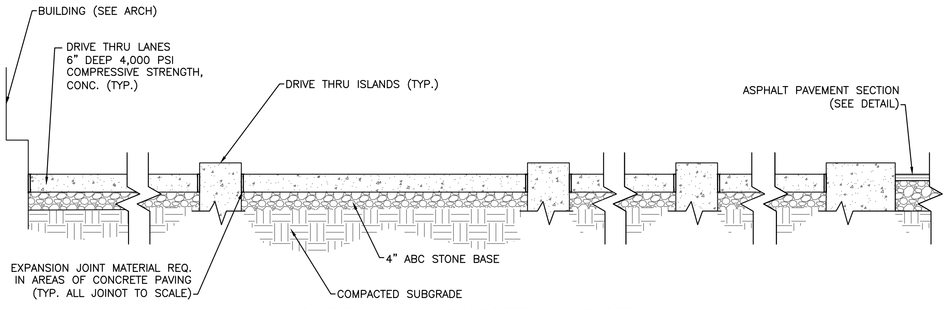


DRIVE THRU LANE CONCRETE PAVING DETAIL

NOT TO SCALE

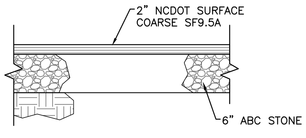


NOTE:
PAVEMENT SECTION MAY VARY DEPENDING UPON FIELD CONDITIONS. CONTRACTOR SHALL COORDINATE W/ OWNER & ENGINEER IF FIELD CHANGES ARE NEEDED.

STANDARD ASPHALT PAVEMENT SECTION

NOT TO SCALE

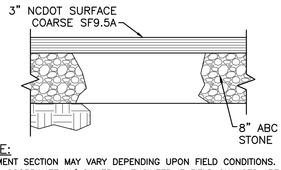


NOTE:
PAVEMENT SECTION MAY VARY DEPENDING UPON FIELD CONDITIONS. CONTRACTOR SHALL COORDINATE W/ OWNER & ENGINEER IF FIELD CHANGES ARE NEEDED.

HEAVY DUTY ASPHALT PAVEMENT SECTION

NOT TO SCALE

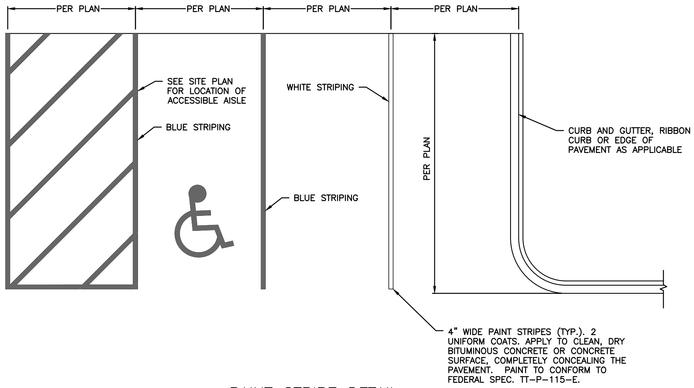


PAINT STRIPE DETAIL

NOT TO SCALE

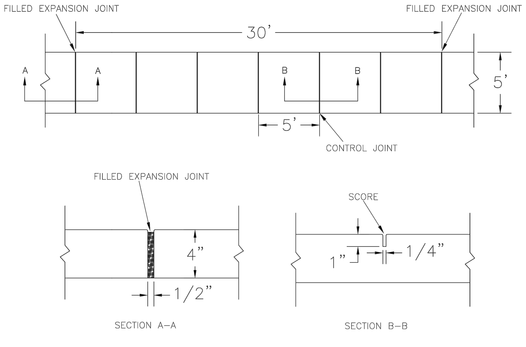


NOTES:

1. JOINT MATERIAL TO COMPLY WITH CURRENT NCDOT STANDARDS.
2. SANITARY SEWER CLEAN-OUTS, WATER METERS, MANHOLES, AND VALVE LIDS TO BE LOCATED OUTSIDE SIDEWALK WHERE FEASIBLE.
3. MINIMUM SIDEWALK WIDTH TO BE 6' MINIMUM IF PLACED AT BACK OF CURB.
4. CONCRETE FOR ALL SIDEWALKS (EXCEPT ANY PORTION CONTAIN WITHIN A DRIVEWAY APRON) SHALL BE CLASS "A" - 3,000 PSI.
5. MINIMUM REPLACEMENT FOR REPAIRS IS A 5' X 5' PANEL
6. 4" STONE BASE MAY BE REQUIRED FOR POOR SOIL CONDITIONS
7. MINIMUM DEPTH FOR TUNNELING BELOW SIDEWALK IS 12"
8. MAX ADJACENT GROUND SLOPE WITHOUT RAILING IS 2:1
9. MIN GRADE FOR PROPER DRAINAGE IS 1% IN AT LEAST 1 DIRECTION. MAX CROSS SLOPE IS 2%. MAX LONGITUDINAL SLOPE IS 8.3%, 10% IF LIMITED BY EXISTING CONDITIONS, OR NO GREATER THAN THE SLOPE OF THE EXISTING ADJACENT ROAD.

STANDARD SIDEWALK DETAIL

NOT TO SCALE

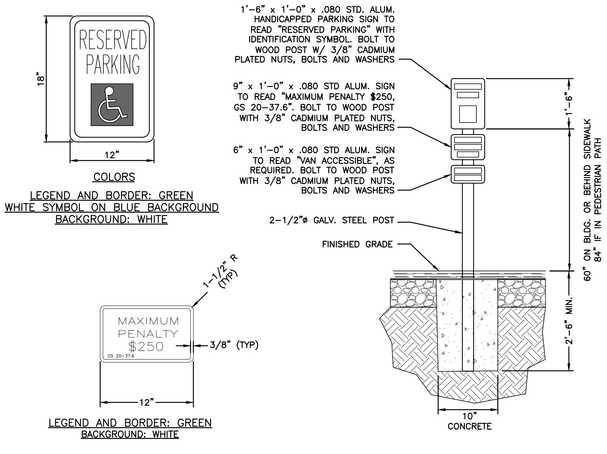


TYPICAL HANDICAPPED SIGN DETAIL

NOT TO SCALE

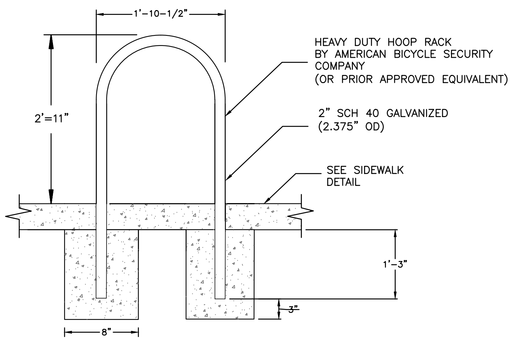


BIKE RACK DETAILS

NOT TO SCALE

COPYRIGHT © 2019
SEPI INC.

X:\2018\SE18.191.00 SECU - Wilmington South 17th Street Branch\Design\Details\Standard Details.dwg PLOTTED: 7/3/2019 10:09 AM BY: JOHN SCOTT

SUMMIT
DESIGN AND ENGINEERING SERVICES
Creatively Inspired - Technically Executed
License #: P-0339
100 East Six Forks Road, Suite 300
Raleigh, NC 27609
Voice: (919) 322-0115 Fax: (919) 322-0116
www.SummitDE.net

PRELIMINARY NOT FOR CONSTRUCTION

SEPI
1 GLENWOOD AVE., SUITE 600
RALEIGH, NC 27603
PHONE 919.789.9977
11020 DAVID TAYLOR DR., SUITE 115
CHARLOTTE, NC 28262
PHONE 704.714.4880
5030 NEW CENTRE DR., SUITE B
WILMINGTON, NC 28403
PHONE 910.523.5715
sepiinc.com
TRANSPORTATION•TRAFFIC•SURVEYING•ENVIRONMENTAL•SITE/CIVIL•INSPECTIONS•CONSTRUCTION MANAGEMENT

ARCHITECT OF RECORD

PROJECT MANAGER
MTA

DRAWN BY JRS
FIRST ISSUE DATE 07/03/2019

THE LOCATIONS OF EXISTING UNDERGROUND UTILITIES SHOWN ARE APPROXIMATE AND ARE ON THE ROADWAY UNLESS OTHERWISE SHOWN. THE CONTRACTOR SHALL BE RESPONSIBLE FOR LOCATING ALL UNDERGROUND UTILITIES ALONG THE PROJECT WHETHER SHOWN OR NOT SHOWN ON THE PLANS. THE CONTRACTOR SHALL ASSUME SOLE RESPONSIBILITY FOR THE PROTECTION OF ALL UTILITIES ENCOUNTERED IN THE CONSTRUCTION ZONE. THE CONTRACTOR SHALL CONTACT THE APPROPRIATE UTILITY PROTECTION SERVICE AT LEAST 3 WORKING DAYS PRIOR TO BEGINNING WORK.
NOTICE:
Know what's below. Call before you dig.
3 WORKING DAYS BEFORE YOU DIG
CALL 811 TO LOCATE UNDERGROUND FACILITIES

OWNER/DEVELOPER/APPLICANT
STATE EMPLOYEES' CREDIT UNION
ADDRESS:
119 N. SALISBURY STREET
RALEIGH, NORTH CAROLINA 27603
PHONE: 919-839-5300

PROJECT
STATE EMPLOYEES' CREDIT UNION
ADDRESS:
4355 S 17TH STREET
WILMINGTON NC 28412

SITE DETAILS

PROJECT NO.
SE18.191.00

SHEET NO.
C-5.2

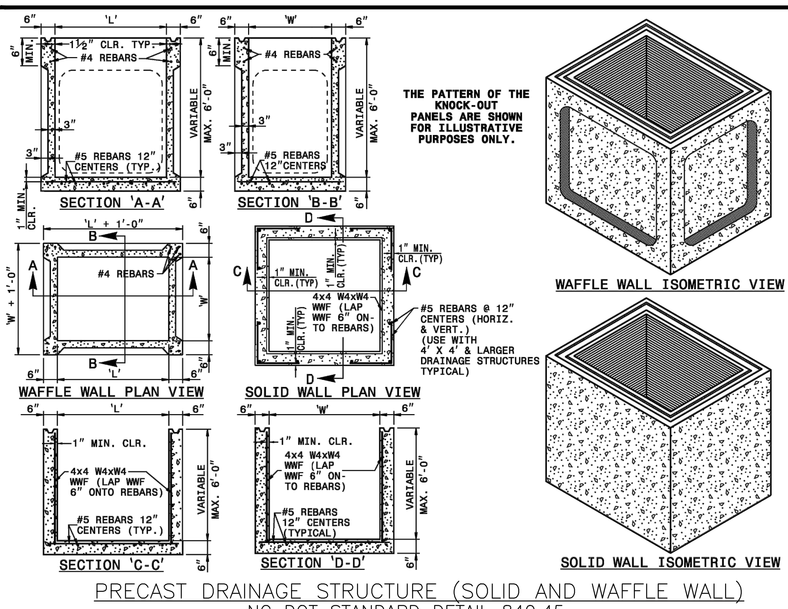


PRECAST DRAINAGE STRUCTURE (SOLID AND WAFFLE WALL)
NC DOT STANDARD DETAIL 840.45

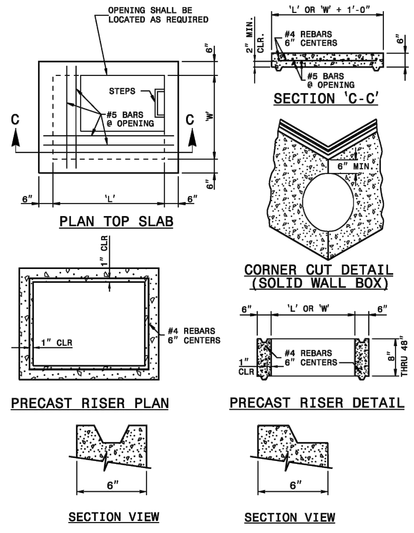


OPTIONAL JOINT DETAILS
NC DOT STANDARD DETAIL 840.16 – 1 OF 1
(12" THRU 30" PIPE)

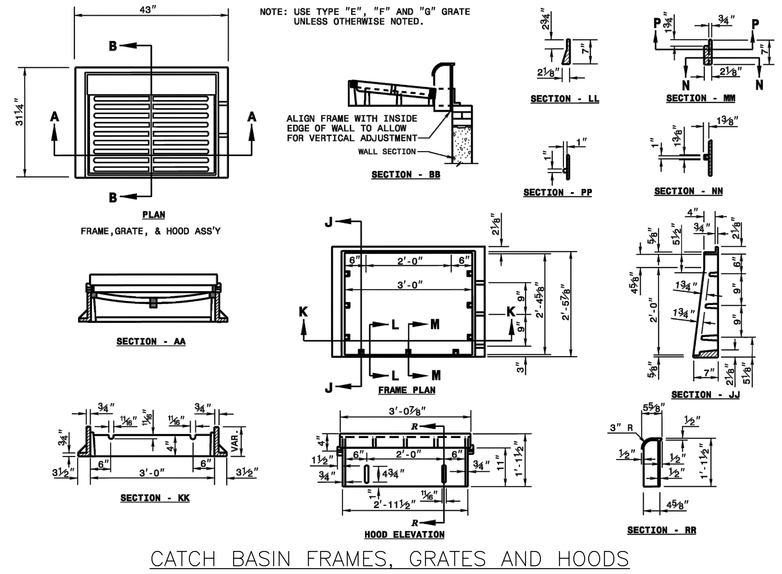


CATCH BASIN FRAMES, GRATES AND HOODS
NC DOT STANDARD DETAIL 840.03 (1 OF 2)

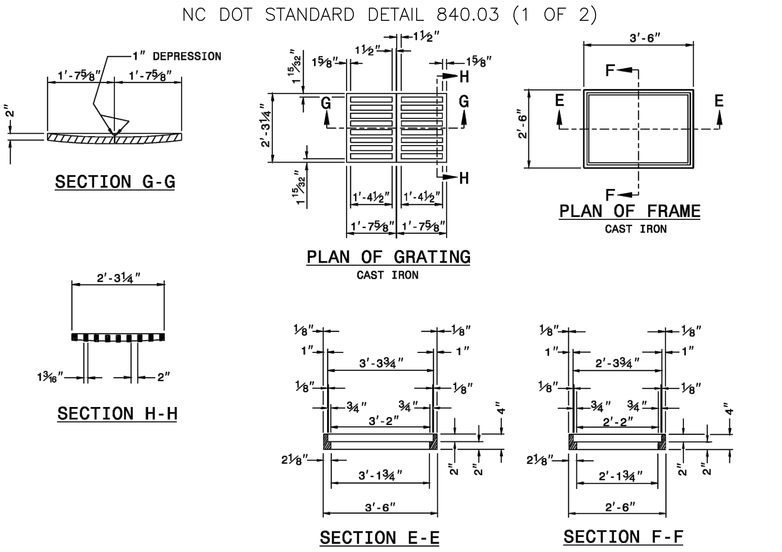


DROP INLET, FRAMES AND GRATES
NC DOT STANDARD DETAIL 840.16

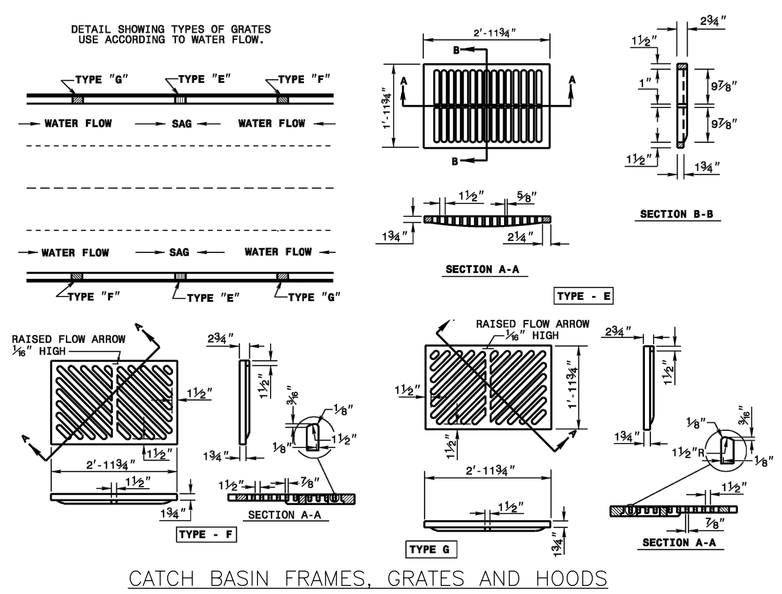


CATCH BASIN FRAMES, GRATES AND HOODS
NC DOT STANDARD DETAIL 840.03 (2 OF 2)

**GENERAL NOTES**

* THIS PRECAST BOX MAY BE USED FOR THE FOLLOWING STANDARDS: 800.01, 840.02, 840.04, 840.05, 840.11, 840.12, 840.14, 840.15, 840.17, 840.18, 840.19, 840.26, 840.27, 840.28, 840.31, 840.32, AND 840.41.
* INSTALL PRECAST DRAINAGE STRUCTURES AND PAY FOR IN ACCORDANCE WITH SPECIFICATION SECTION 840.
* DO NOT PLACE PRECAST DRAINAGE STRUCTURES UNDER TRAFFIC OF WHERE TRAFFIC WILL BE DETOURED.
* USE 4000 PSI CONCRETE.
* PROVIDE ALL REINFORCING STEEL WHICH MEETS ALL ASTM A615 FOR GRADE 60 WELDED WIRE FABRIC CONFORMING TO ASTM A185.
* LIMIT MAXIMUM DEPTH TO TOP OF BOTTOM OF SLAB FOR WAFFLE WALL STRUCTURE TO 10'-0"; LIMIT SOLID WALL STRUCTURE TO 15'-0"
* PLACE LIFT HOLES OR PINS IN ACCORDANCE WITH OSHA STANDARD 1926.704.
* CUT OR FORM OPENINGS FOR PIPE TO PROVIDE REQUIRED SIZE AND LOCATION. ORIENT WAFFLE WALL STRUCTURES SO THAT PIPES ENTER THROUGH THE KNOCKOUT / WAFFLE PANELS ONLY. PIPES MAY ENTER THROUGH THE CORNERS OF SOLID WALL BOXES IF A MINIMUM 6" OF WALL IS PROVIDED ABOVE THE HOLE.
* ALL ELEMENOT TO SCALE PRECAST TO MEET ASTM C913.
* FRAME AND GRATE HEIGHT MAY BE ADJUSTED WITH CONCRETE OR BRICK IN ACCORDANCE WITH STANDARD 840.25.
* PROVIDE PRECAST STRUCTURES OVER 4'-0" IN DEPTH WITH STEPS AS DIRECTED BY THE ENGINEER.
* WELDED WIRE FABRIC MAY BE SUBSTITUTED FOR THE REBAR AS LONG AS THE SAME AREA OF STEEL IS PROVIDED.
* SEAL JOINOT TO SCALE WITH A FLEXIBLE BUTYL RUBBER.
* LIMIT MAXIMUM STRUCTURE SIZE TO INSIDE CLEAR DIMENSIONS OF 5'-0" X 5'-0".
* THE OUTSIDE PIPE DIAMETER PLUS 2" OR THE OPENING REQUIRED FOR THE FRAME AND GRATE IS A MINIMUM STRUCTURE SIZE WHICHEVER IS GREATER.
* USE MANHOLE FRAME AND COVER AS INDICATED ON THE PLANS. REINFORCE OPENING AS SHOWN ON THIS SHEET.

**STRUCTURES**

1. PRECAST STRUCTURES SHALL MEET NC DOT 840.45 OR PRIOR APPROVED EQUIVALENT.
2. BRICK BUILT CATCH BASINS CAN ALTERNATIVELY BE USED, AND SHALL MEET NC DOT 840.01, OR PRIOR APPROVED EQUIVALENT.
3. CONCRETE CATCH BASINS CAN ALTERNATIVELY BE USED, AND SHALL MEET NC DOT 840.02, OR PRIOR APPROVED EQUIVALENT.
4. CONCRETE DROP INLETS CAN ALTERNATIVELY BE USED, AND SHALL MEET NC DOT 840.14, OR PRIOR APPROVED EQUIVALENT.
5. BRICK BUILT DROP INLETS CAN ALTERNATIVELY BE USED, AND SHALL MEET NC DOT 840.15, OR PRIOR APPROVED EQUIVALENT.

**CASTINGS**

1. CATCH BASIN CASTINGS SHALL BE NC DOT 840.03, OR PRIOR APPROVED EQUIVALENT .
2. DROP INLET CASTINGS SHALL BE NC DOT 840.16, OR PRIOR APPROVED EQUIVALENT .
3. STORM DRAIN MANHOLE CASTINGS SHALL BE NC DOT 840.54, OR PRIOR APPROVED EQUIVALENT .

**OTHER**

1. ORIENTATION OF STORM DRAIN INLETS ON PLAN ARE FOR THE GRATE AND/OR CASTINGS. MINIMUM STRUCTURE SIZE IS 2' X 2' PLAN DIMENSION. CONTRACTOR SHALL PROVIDE BOXES LARGER THAN MINIMUM SIZE, ORIENT THE BOX/STRUCTURE, AND/OR PROVIDE TRANSITION TOPS AS NECESSARY TO ACCEPT THE PIPE SIZES AND TO ACHIEVE THE PIPE ALIGNMENOT TO SCALE AS SHOWN ON THE PLAN. PIPES SHALL NOT CONNECT AT BOX CORNERS WITHOUT PRIOR APPROVAL FROM THE ENGINEER. SUMPS SHALL BE ZERO INCHES UNLESS OTHERWISE SHOWN. THERE SHALL BE NO MAN STEPS UNLESS OTHERWISE SHOWN.

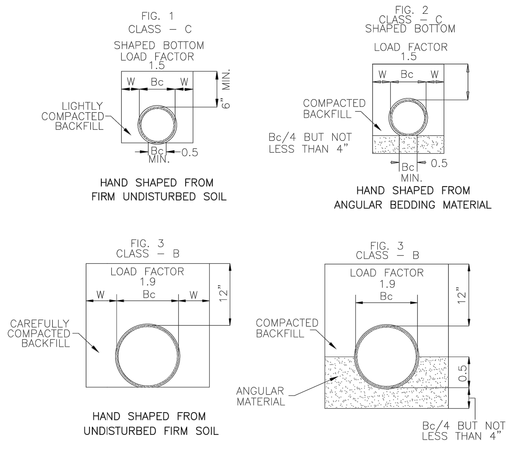


GUIDELINES FOR BEDDING DETAILS,
STORM SEWER CLASSES (B & C)
NOT TO SCALE

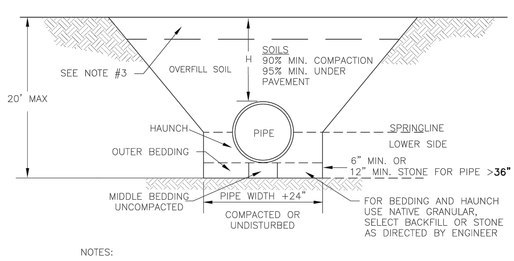


NOTES:

1. CONTRACTOR SHALL ENSURE BOTTOM OF TRENCH IS SUITABLE FOR PIPE INSTALLATION AND DOES NOT REQUIRE FOUNDATION CONDITIONING STONE.
2. CONTRACTOR TO INSTALL BEDDING AND PIPE BEFORE INSTALLING HAUNCH AND THEN OVERFILL. SOILS SHALL BE INSTALLED IN 6"–8" LIFTS AND COMPACTED TO MIN. % DENSITY AS DETERMINED BY THE STANDARD PROCTOR ASTM D–698–A METHOD.
3. WHERE IN PAVEMENT, CONTRACTOR SHALL ADHERE TO CITY STREET CUT POLICY AND SD 1–04 OR SD 1–05 FOR ROAD AND PAVEMENT REBUILD.
4. SOIL SHALL BE COMPACTED BY A MECHANIZED TAMP (I.E. JUMPING JACK). HOWEVER, VIBRATORY ROLLERS > 18" WIDTH MAY BE USED FOR LARGER EXCAVATIONS. THE PLATE TAMP METHOD SHALL NOT BE USED.
5. THIS DETAIL IS REPRESENTATIVE AND PIPE TRENCH DESIGN IS SUBJECT TO SPECIFIC SOIL CATEGORY (I, II, III), AND INSTALLATION TYPE (1, 2, 3, 4), AS DIRECTED BY THE ENGINEER AND SITE CONDITIONS.

PIPE TRENCH
TYPICAL
NOT TO SCALE

COPYRIGHT © 2019
SEPI INC.

SUMMIT DESIGN AND ENGINEERING SERVICES
Creatively Inspired - Technically Executed
License #: P-0339
100 East Six Forks Road, Suite 300
Raleigh, NC 27609
Voice: (919) 322-0115 Fax: (919) 322-0116
www.SummitDE.net

PRELIMINARY NOT FOR CONSTRUCTION

SEPI
1 GLENWOOD AVE., SUITE 600
RALEIGH, NC 27603
PHONE 919.789.9977
11020 DAVID TAYLOR DR., SUITE 115
CHARLOTTE, NC 28262
PHONE 704.714.4880
5030 NEW CENTRE DR., SUITE B
WILMINGTON, NC 28403
PHONE 910.523.5715
sepiinc.com
TRANSPORTATION • TRAFFIC • SURVEYING • ENVIRONMENTAL • SITE/CIVIL • INSPECTIONS • CONSTRUCTION MANAGEMENT

ARCHITECT OF RECORD

PROJECT MANAGER
MTA

| DRAWN BY | FIRST ISSUE DATE |
|---|---|
| JRS | 07/03/2019 |

THE CONTRACTOR CONTACTING, NOTIFYING AND ARRANGING FOR THE MARKING OF ALL UTILITIES IS REPRESENTED TO BE THE ONE ULTIMATELY RESPONSIBLE FOR THE ACCURACY OF THE INFORMATION. NEITHER THE OWNER NOR THE ENGINEER ASSUMES ANY RESPONSIBILITY FOR THE ACCURACY OF THE INFORMATION PROVIDED BY THE UTILITY COMPANIES OR AGENCIES. THE CONTRACTOR IS ALSO RESPONSIBLE FOR ACCURATELY LOCATING ALL UTILITIES NOT CONTACTED BY THE ENGINEER AND ALL UTILITIES LOCATED BY THE UTILITY COMPANIES OR AGENCIES. THE CONTRACTOR SHALL BE RESPONSIBLE FOR ANY DAMAGE TO UTILITIES RESULTING FROM THE CONTRACTOR'S FAILURE TO LOCATE, PROTECT, SUPPORT, OR MAINTAIN UTILITIES.

811 Know what's below. Call before you dig.
3 WORKING DAYS BEFORE YOU DIG
IT'S THE LAW!
NC 811 PROTECTS UNDERGROUND FACILITIES

NOTICE:

OWNER/DEVELOPER/APPLICANT
STATE EMPLOYEES' CREDIT UNION
ADDRESS:
119 N. SALISBURY STREET
RALEIGH, NORTH CAROLINA 27603
PHONE: 919-839-5300

PROJECT
STATE EMPLOYEES' CREDIT UNION
ADDRESS:
4355 S 17TH STREET
WILMINGTON NC 28412

STORM DETAILS

PROJECT NO.
SE18.191.00

SHEET NO.
C-5.3

X:\2018\SE18.191.00 SECU - Wilmington South 17th Street Branch\Design\Details\Standard Details.dwg PLOTTED: 7/3/2019 10:09 AM BY: JOHN SCOTT

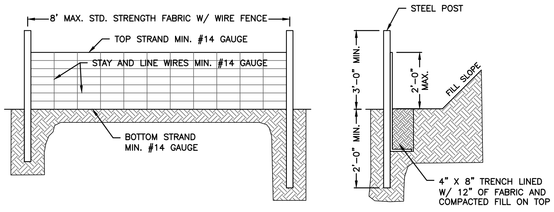


NOTES:
1. WIRE FENCE (IF USED) SHALL BE MINIMUM 14 GAUGE WITH A MAXIMUM MESH OPENING OF 6-INCHES.
2. SYNTHETIC FILTER FABRIC OF AT LEAST 95% BY WEIGHT OF POLYOLEFIN'S OR POLYESTER, WHICH IS CERTIFIED BY THE MANUFACTURER OR SUPPLIER AS CONFORMING TO THE REQUIREMENTS IN ASTM D 6461 AND ALSO SHOULD CONTAIN ULTRAVIOLET RAY INHIBITORS AND STABILIZERS ACCORDING TO ASTM D 4355.
3. SEE THE NC EROSION CONTROL MANUAL FOR SPECIFICATIONS INSTALLING SEDIMENT FENCE USING THE SLICING METHOD MACHINERY.

## TEMPORARY SILT FENCE
NOT TO SCALE

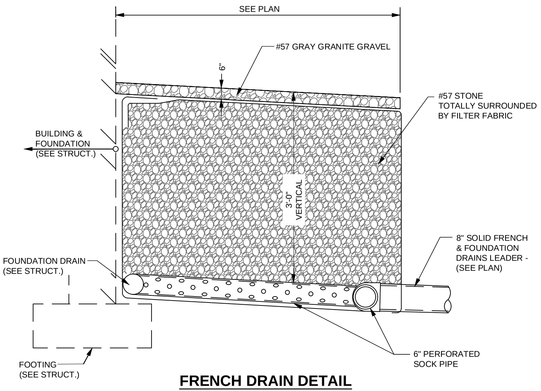


## FRENCH DRAIN DETAIL
NOT TO SCALE

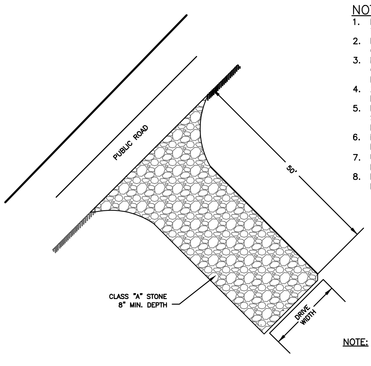


NOTES:
1. PROVIDE TURNING RADIUS SUFFICIENT TO ACCOMMODATE LARGE TRUCKS
2. LOCATE ENTRANCES TO PROVIDE FOR UTILIZATION BY ALL CONSTRUCTION VEHICLES
3. MUST BE MAINTAINED IN A CONDITION WHICH WILL PREVENT TRACKING OR DIRECT FLOW OF MUD ONTO THE STREETS. PERIODIC TOP DRESSING WITH STONE WILL BE NECESSARY.
4. ANY MATERIAL TRACKED ONTO THE ROADWAY MUST BE CLEANED UP IMMEDIATELY.
5. LOCATE ALL GRAVEL CONSTRUCTION ENTRANCES AT ALL POINOT TO SCALE OF INGRESS AND EGRESS UNTIL SITE IS STABILIZED. PROVIDE FREQUENT CHECKS OF THE DEVICE AND TIMELY MAINTENANCE.
6. NUMBER AND LOCATION OF CONSTRUCTION ENTRANCES TO BE DETERMINED BY THE ENGINEER.
7. USE CLASS "A" STONE OR OTHER AGGREGATE APPROVED BY THE ENGINEER.
8. INSTALL CONSTRUCTION ENTRANCES IN A WAY TO PREVENT VEHICLES FROM BYPASSING CONSTRUCTION ENTRANCE LEAVING PROJECT SITE.

NOTE: PLACE FILTRATION GEOTEXTILE BENEATH STONE

## GRAVEL CONSTRUCTION ENTRANCE
NOT TO SCALE

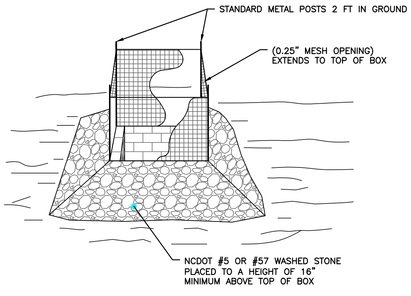


NOTES:
1. DRIVE 5-FOOT STEEL POSTS 2 FEET INTO THE GROUND SURROUNDING THE INLET. SPACE POSTS EVENLY AROUND THE PERIMETER OF THE INLET, A MAXIMUM OF 4 FEET APART.
2. SURROUND THE POSTS WITH WIRE MESH HARDWARE CLOTH. SECURE THE WIRE MESH TO THE STEEL POSTS AT THE TOP, MIDDLE, AND BOTTOM. PLACING A 1-FOOT FLAP OF THE WIRE MESH UNDER THE GRAVEL FOR ANCHORING IS RECOMMENDED.
3. PLACE CLEAN GRAVEL (NC DOT #5 OR #57 STONE) ON A 2:1 SLOPE WITH A MIN HEIGHT OF 16 INCHES AROUND THE WIRE, AND SMOOTH TO AN EVEN GRADE.

## STANDARD INLET PROTECTION
NOT TO SCALE

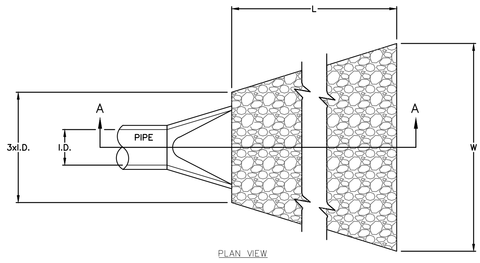


PLAN VIEW

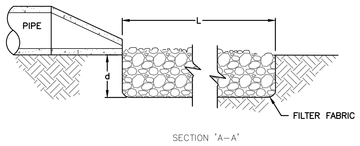


SECTION "A-A"

NOTES:
1. L = THE LENGTH OF THE RIPRAP APRON.
2. d = 1.5 TIMES THE MAXIMUM STONE DIAMETER BUT NOT LESS THAN 6" (INCHES).
3. A FILTER BLANKET OR FILTER FABRIC SHOULD BE INSTALLED BETWEEN THE RIPRAP AND SOIL FOUNDATION.

| DISSIPATOR | L (ft) | 3 x I.D. (ft) | W (ft) | $d_{50}$ (in) | d (THICKNESS) (in) |
|---|---|---|---|---|---|
| 24" RCP FES | X | X | X | X | X |
| 30" CMP FES | X | X | X | X | X |
| | | | | | |

## ENERGY DISSIPATOR
NOT TO SCALE

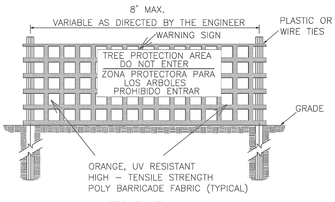


FRONT VIEW

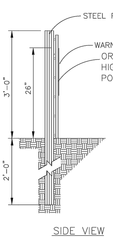


SIDE VIEW

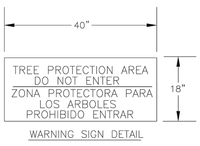


WARNING SIGN DETAIL

NOTES:
1. THE TREE PROTECTION FENCING SHALL NOT BE VIOLATED FOR THE ENTIRE DURATION OF THE PROJECT WITHOUT APPROVAL FROM URBAN FORESTRY STAFF.
2. WARNING SIGNS TO BE MADE OF DURABLE, WEATHERPROOF MATERIAL. LETTERS TO BE 3" HIGH, MINIMUM, CLEARLY LEGIBLE AND SPACED AS DETAILED.
3. SIGNS SHALL BE PLACED AT 50' MAXIMUM INTERVALS. PLACE A SIGN AT EACH END OF LINEAR TREE PROTECTION AND 50' ON CENTER THEREAFTER. FOR TREE PROTECTION AREAS LESS THAN 100' IN PERIMETER, PROVIDE NO LESS THAN TWO SIGNS PER PROTECTION AREA.
4. ATTACH SIGNS SECURELY TO FENCE POSTS AND FABRIC. MAINTAIN TREE PROTECTION FENCE AND SIGNS THROUGHOUT DURATION OF PROJECT.
5. TREE PROTECTION FENCING AND SIGNAGE SHALL BE REMOVED AFTER CONSTRUCTION.
6. ADDITIONAL SIGNS MAY BE REQUIRED BY CITY OF WILMINGTON, BASED ON ACTUAL FIELD CONDITIONS.

NOTE:
THE CRITICAL ROOT ZONE (CRZ) OF A TREE IS WHERE THE MAJORITY OF A TREE'S ROOTS LAY. 85% OF MOST TREE ROOTS ARE FOUND IN THE TOP 24" OF THE SOIL AND SUPPLY THE MAJORITY OF NUTRIENTS AND WATER. GENERALLY, ROOTS SPREAD OUT 2-3X THE HEIGHT OF THE TREE.

NOTE:
CROWN OF THE TREE IS NEEDED FOR LEAF GROWTH TO PRODUCE OXYGEN, FILTER THE AIR, REDUCE WIND AND SOFTEN NOISE. DO NOT DISFIGURE CROWN WITH INTENSIVE PRUNING.

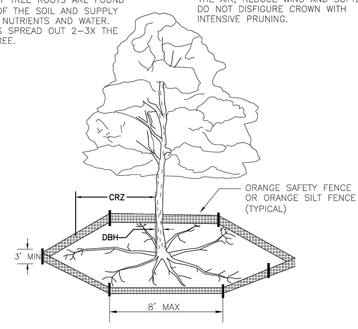


NOTES:
1. PROTECT CRITICAL ROOT ZONE (CRZ) OF TREES PRIOR TO CONSTRUCTION. CLEARLY MARK THE TREES AND ERECT A PROTECTIVE BARRIER AT THE CRZ. BARRIER SHALL BE MAINTAINED UNTIL CONSTRUCTION IS COMPLETE.
2. CRZ RADIUS IS 1 FT PER INCH OF TREE DIAMETER AT BREAST HEIGHT (DBH).
3. IF CONSTRUCTION OCCURS WITHIN THE CRZ, AT LEAST 12" OF MULCH AND/OR LOGGING MATTS SHALL BE PLACED WHERE MACHINERY MANEUVERS TO REDUCE SOIL COMPACTION IN THIS ZONE.
4. WHERE SIDEWALKS AND PATHWAYS PASS WITHIN CRZ, EXTRA CARE SHALL BE TAKEN TO AVOID DAMAGE TO THE ROOTS. ALTERNATE CONSTRUCTION METHODS, SUCH AS A REINFORCED SIDEWALK, SHALL BE IMPLEMENTED AS NECESSARY.
5. FOR ALL TREES, CUTTING OF LARGE STRUCTURAL ROOTS LOCATED NEAR THE BASE OF THE TRUNK IS PROHIBITED. DO NOT COMPACT SOIL BENEATH TREES. NO VEHICLE SHALL BE ALLOWED TO PARK UNDER TREES. NO MATERIALS OR EQUIPMENT SHALL BE STORED BENEATH TREES. DAMAGING THE BARK WITH LAWNMOWERS, CONSTRUCTION EQUIPMENT, OR ANYTHING ELSE IS PROHIBITED. CONTRACTOR SHALL REPAIR DAMAGE TO TREES.
6. FAILING TO INSTALL OR MAINTAIN PROTECTION MEASURES SHALL RESULT IN A STOP WORK ORDER AND FINE OF $500/DAY. DISTURBANCE OTHER THAN THAT ALLOWED ON THE APPROVED PLAN WILL REQUIRE OWNER TO POST A LETTER OF CREDIT FOR 3 YRS FOR TREE MITIGATION.

## TREE PROTECTION DETAILS
NOT TO SCALE

COPYRIGHT © 2019
SEPI INC.

SUMMIT DESIGN AND ENGINEERING SERVICES
Creatively Inspired - Technically Executed
License #: P-0339
100 East Six Forks Road, Suite 300
Raleigh, NC 27609
Voice: (919) 322-0115 Fax: (919) 322-0116
www.SummitDE.net

PRELIMINARY NOT FOR CONSTRUCTION
NORTH CAROLINA PROFESSIONAL SEAL 042247 ENGINEER
SEAL C-2677 CORPORATE SEAL

SEPI
1 GLENWOOD AVE., SUITE 600
RALEIGH, NC 27603
PHONE 919.789.9977
11020 DAVID TAYLOR DR., SUITE 115
CHARLOTTE, NC 28262
PHONE 704.714.4880
5030 NEW CENTRE DR., SUITE B
WILMINGTON, NC 28403
PHONE 910.523.5715
sepiinc.com
TRANSPORTATION•TRAFFIC•SURVEYING•ENVIRONMENTAL•SITE/CIVIL•INSPECTIONS•CONSTRUCTION MANAGEMENT

ARCHITECT OF RECORD

PROJECT MANAGER
MTA

DRAWN BY JRS
FIRST ISSUE DATE 07/03/2019

811 Know what's below. Call before you dig. 3 WORKING DAYS BEFORE YOU DIG
NOTICE:
THE LOCATIONS OF EXISTING UNDERGROUND UTILITIES ARE SHOWN AS ADVISED BY THE OWNERS WHOSE UTILITIES ARE PRESENT. THE CONTRACTOR SHALL VERIFY THE LOCATIONS OF ALL UTILITIES BEFORE STARTING WORK. THE CONTRACTOR SHALL ASSUME FULL RESPONSIBILITY FOR THE PROTECTION OF ALL UTILITIES. THE CONTRACTOR SHALL ACCOMMODATE THE LOCATIONS OF ALL UTILITIES IN THE PERFORMANCE OF THE WORK.
THE CONTRACTOR SHALL NOTIFY THE ENGINEER IMMEDIATELY IF ANY UTILITIES NOT SHOWN ON THE PLANS ARE ENCOUNTERED. ANY DAMAGE TO UTILITIES SHALL BE REPAIRED IMMEDIATELY AT THE EXPENSE OF THE CONTRACTOR. THE ENGINEER SHALL NOT BE RESPONSIBLE FOR ANY DAMAGE TO UTILITIES NOT SHOWN ON THE PLANS OR NOT ACCURATELY SHOWN ON THE PLANS.
UNDERGROUND UTILITIES

OWNER/DEVELOPER/APPLICANT
STATE EMPLOYEES' CREDIT UNION
ADDRESS:
119 N. SALISBURY STREET
RALEIGH, NORTH CAROLINA 27603
PHONE: 919-839-5300

PROJECT
STATE EMPLOYEES' CREDIT UNION
ADDRESS:
4355 S 17TH STREET
WILMINGTON NC 28412

EROSION CONTROL DETAILS

PROJECT NO.
SE18.191.00

SHEET NO.
C-5.4

X:\2018\SE18.191.00 SECU - Wilmington South 17th Street Branch\Design\Details\Standard Details.dwg PLOTTED: 7/3/2019 10:10 AM BY: JOHN SCOTT

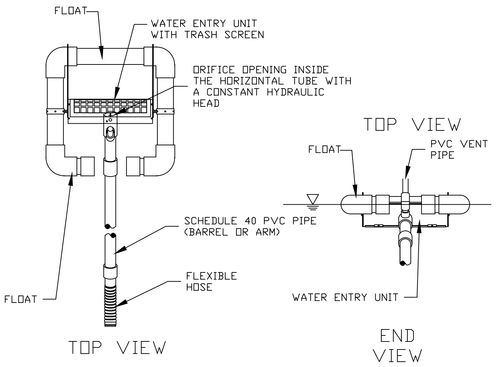


GENERAL NOTES:

1. EMBANKMENT MUST BE COMPACTED TO DESIGN SPECIFICATIONS.
2. EROSION PROTECTION MUST BE INSTALLED ALONG THE EMBANKMENT AND AT THE DISCHARGE END OF THE PIPE.
3. INSPECT SYSTEM REGULARLY TO ENSURE IT IS FUNCTIONING IN A CORRECT MANNER.
4. SKIMMER SHALL BE CONNECTED TO THE PERMANENT LOW FLOW CONTROL PIPE.
5. BASIN OUTLET STRUCTURES MUST BE ON SITE BEFORE GRADING OPERATIONS BEGIN.
6. EXCEPT DURING EXTREEM STORM EVENOT TO SCALE WHEN WATER WILL FLOW OVER THE EMERGENCY WEIR, ONLY OUTLET FROM THE SEDIMENT BASIN (PRIOR TO FULL SITE STABILIATION) SHALL BE THE SKIMMER. NO WATER SHALL LEAVE SEDIMENT BASIN IN ANY OTHER MANNER DURING NORMAL RAIN EVENOT TO SCALE.

| | POND |
|---|---|
| SKIMMER SIZE (IN.) | 2.0 |
| SKIMMER ORIFICE DIAMETER (IN.) | 1.5 |
| NO. OF DAYS TO DRAIN | 3.0 |
| VENDOR | FAIRCLOTH |

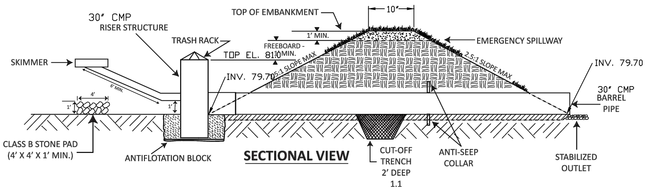


**NOTES**

1. SEED AND PLACE MATTING FOR EROSION CONTROL ON INTERIOR AND EXTERIOR SIDESLOPES.
2. INSTALL A MINIMUM OF 3 COIR FIBER BAFFLES IN ACCORDANCE WITH PRACTICE STANDARD 6.65.
3. INSTALL SKIMMER AND COUPLING TO RISER STRUCTURE OR DIRECTLY INTO EMBANKMENT 1 FT. FROM BOTTOM OF BASIN.
4. THE ARM PIPE SHALL HAVE A MINIMUM LENGTH OF 6 FT. BETWEEN THE SKIMMER AND COUPLING.

NOT TO SCALE

## FAIRCLOTH SKIMMER DISCHARGE SYSTEM WITH OUTLET STRUCTURE

NOT TO SCALE

CONSTRUCTION SEQUENCE

1. REQUEST PRE-CONSTRUCTION MEETING WITH NCDEQ EROSION INSPECTOR.
2. INSTALL GRAVEL CONSTRUCTION ENTRANCE, SILT FENCE, BERMS, AND SEDIMENT BASIN, ETC., AS SHOWN ON PHASE 1 PLAN.
3. BEGIN CLEARING OPERATIONS.
4. INSTALL INITIAL PORTION OF STORM DRAIN LINES AND INLET PROTECTION. INSTALL THEM IN THE SAME EFFORT TO MINIMIZE SEDIMENT FROM ENTERING THE STORM DRAIN SYSTEM.
5. REMOVE TEMPORARY DIVERSION BERMS
6. COMMENCE GRADING OPERATIONS FOR INITIAL PORTION OF PARKING AND CURB AND GUTTER.
7. STABILIZE ALL DISTURBED AREAS AS SOON AS FINAL GRADES ARE ESTABLISHED.
8. INSTALL INITIAL PORTION OF SITE WORK.
9. TOWARDS COMPLETION OF GRADING OPERATIONS AND SITE WORK, REMOVE ACCUMULATED SEDIMENT FROM SEDIMENT BASIN AND RESTORE BASIN TO PLAN ELEVATION.
10. INSTALL REMAINDER OF SITE WORK
11. REMOVE TEMPORARY CONTROL DEVICES (SILT FENCE, RISER, BARREL, SKIMMER, AND SEDIMENT BASIN BERM, ETC.) ONCE PERMANENT VEGETATIVE COVER IS ESTABLISHED.

GRADING NOTES

1. INITIATE CONSTRUCTION SEQUENCE BEFORE BEGINNING CLEARING AND GRADING OPERATIONS.
2. CLEAR AREAS TO BE GRADED PF ALL VEGETATION. PROTECT VEGETATION BEYOND GRADING LIMITS.
3. STRIP TOPSOIL TO FULL AREAS TO BE GRADED AND STOCKPILE OR REMOVE FROM SITE.
4. COMPACT ALL FILL AREAS TO 95% OF MAXIMUM DENSITY.
5. ALL BANKS AND SWALE SIDE SLOPES SHALL BE GRADED NO STEEPER THAN 3:1 SLOPES.
6. PROPOSED SPOT ELEVATIONS ARE SHOWN AT FINISHED GRADE.
7. OPERATOR SHALL VERIFY EXISTING TOPOGRAPHY IN RELATION TO THE PROPOSED GRADES TO ENSURE DRAINAGE IN THE DIRECTIONS INDICATED ON THE PLAN.

EROSION CONTROL

1. ANY GRADING BEYOND THE DENUDED LIMITS SHOWN ON THE PLAN IS A VIOLATION AND IS SUBJECT TO A FINE.
2. ADDITIONAL DEVICES MAY BE REQUIRED AS AGREED UPON BY THE FIELD INSPECTOR, ENGINEER, AND OWNER.

BASIN BAFFLES MAINTENANCE PLAN

1. INSPECT BAFFLES AT LEAST ONCE A WEEK AFTER EACH RAINFALL. MAKE ANY REQUIRED REPAIRS IMMEDIATELY.
2. BE SURE TO MAINTAIN ACCESS TO BAFFLES. SHOULD FABRIC OF A BAFFLE COLLAPSE, TEAR, DECOMPOSE, OR BECOME INEFFECTIVE, REPLACE IT PROMPTLY.
3. REMOVE SEDIMENT DEPOSITS WHEN IT REACHES HALF FULL TO PROVIDE ADEQUATE STORAGE VOLUME FOR THE NEXT RAIN AND TO REDUCE PRESSURE ON THE BAFFLES. TAKE CARE TO AVOID DAMAGING THE BAFFLES DURING CLEANOUT, AND REPLACE IF DAMAGED DURING CLEANOUT OPERATIONS. SEDIMENT DEPTH SHOULD NEVER EXCEED HALF THE DESIGNED STORAGE DEPTH.
4. AFTER THE CONTRIBUTING DRAINAGE AREA HAS BEEN PROPERLY STABILIZED, REMOVE ALL BAFFLE MATERIALS AND UNSTABLE SEDIMENT DEPOSITS, BRING THE AREA TO GRADE, AND STABILIZE IT.

BASIN SKIMMER MAINTENANCE PLAN

1. INSPECT SKIMMER SEDIMENT BASINS AT LEAST WEEKLY AND AFTER EVERY SIGNIFICANT (ONE HALF INCH OR GREATER) RAINFALL EVENT AND REPAIR IMMEDIATELY. REMOVE SEDIMENT AND RESTORE THE BASIN TO ITS ORIGINAL DIMENSIONS WHEN SEDIMENT ACCUMULATES TO ONE-HALF HEIGHT THE HEIGHT OF THE FIRST BAFFLE. PULL DOWN THE SKIMMER TO ONE SIDE SO THAT THE SEDIMENT UNDERNEATH CAN BE EXCAVATED. EXCAVATE THE SEDIMENT FROM THE ENTIRE BASIN, NOT JUST AROUND THE SKIMMER OR THE FIRST CELL. MAKE SURE VEGETATION GROWING IN THE BOTTOM OF THE BASIN DOSE NOT HOLD DOWN THE SKIMMER.
2. IF THE SKIMMER IS CLOGGED WITH TRASH AND THERE IS WATER IN THE BASIN, USUALLY JERKING THE ROPE WILL MAKE THE SKIMMER BOB UP AND DOWN AND DISLODGE THE DEBRIS AND RESTORE THE FLOW. IF THIS DOSE NOT WORK, PULL THE SKIMMER OVER TO THE SIDE OF THE BASIN AND REMOVE THE DEBRIS. ALSO CHECK THE ORIFICE INSIDE THE SKIMMER AND SEE IF IT IS CLOGGED: IF SO REMOVE THE DEBRIS.
3. IF THE SKIMMER ARM OR BARREL PIPE IS CLOGGED, THE ORIFICE CAN BE REMOVED AND THE OBSTRUCTION CLEARED WITH A PLUMBER'S SNAKE OR BY FLUSHING WITH WATER. BE SURE AND REPLACE THE ORIFICE BEFORE REPOSITIONING THE SKIMMER.
4. CHECK THE FABRIC LINED SPILLWAY FOR DAMAGE AND MAKE ANY REQUIRED REPAIRS WITH FABRIC THAT SPANS THE FULL WIDTH OF THE SPILLWAY. CHECK THE EMBANKMENT, SPILLWAYS AND OUTLET FOR EROSION DAMAGE AND INSPECT THE EMBANKMENT FOR PIPING AND SETTLEMENT. MAKE ALL NECESSARY REPAIRS IMMEDIATELY. REMOVE ALL TRASH AND OTHER DEBRIS FROM THE SKIMMER AND POOL AREAS.
5. FREEZING WEATHER CAN RESULT IN ICE FORMING IN THE BASIN. SOME SPECIAL PRECAUTIONS SHOULD BE TAKEN IN THE WINTER TO PREVENT THE SKIMMER FROM PLUGGING WITH ICE.

GENERAL ERROSION CONTROL MAINTENANCE PLAN

1. ALL EROSION AND SEDIMENT CONTROL PRACTICES WILL BE CHECKED FOR STABILITY AND OPERATION FOLLOWING EVERY RUNOFF-PRODUCING RAINFALL BUT IN NO CASE LESS THAN ONCE EVERY WEEK. ANY NEEDED REPAIRS WILL BE MADE IMMEDIATELY TO MAINTAIN ALL PRACTICES AS DESIGNED.
2. SEDIMENT WILL BE REMOVED FROM BEHIND THE SEDIMENT FENCE AND INLET PROTECTION FENCE WHEN IT BECOMES ABOUT 0.5 FEET DEEP AT THE FENCE. THE SEDMENT FENCE WILL BE REPAIRED AS NECESSARY TO MAINTAIN A BARRIER.
3. ALL SEEDED AREAS WILL BE FERTILIZED, RESEEDED AS NECESSARY, AND MULCHED ACCORDING TO SPECIFICATIONS IN THE VEGETATIVE PLAN TO MAINTAIN A VIGOROUS, DENSE, VEGETATIVE COVER.
4. CONSTRUCTION ENTRANCE TO BE CLEANED WHEN SEDIMENT ACCUMULATIONS ARE VISIBLE OR SEDIMENT IS DEPOSITED ON THE ASPHALT AND STONE WILL BE PERIODICALLY TOP DRESSED WITH 2 INCHES OF #4 STONE TO MAINTAIN 8" MIN. DEPTH.

SITE NOTES

1. THE CONTRACTOR SHALL VISIT THE SITE TO FAMILIARIZE THEMSELVES WITH FIELD CONSTRUCTION CONDITIONS.
2. BORROW MATERIAL: ALL BORROWED MATERIAL MUST COME FROM A LEGALLY OPERATED MINE OR OTHER SOURCE APPROVED BY THE STATE.
3. CLEARED, GRUBBED, STRIPPED, OR EXCAVATED SPOIL SHALL BE REMOVED FROM THE SITE OR USED IN LANDSCAPED ISLANDS.

**GROUND STABILAZATION REQUIREMENT**

| SITE AREA DESCRIPTION | STABILIZATION | TIMEFRAME EXCEPTIONS |
|---|---|---|
| PERIMETER DIKES, SWALES, DITCHES AND SLOPES | 7 DAYS | NONE |
| HIGH QUALITY WATER (HQW) ZONES | 7 DAYS | NONE |
| SLOPES STEEPER THAN 3:1 | 7 DAYS | IF SLOPES ARE 10' OR LESS IN LENGTH & ARE NOT STEEPER THAN 2:1, 14 DAYS ARE ALLOWED |
| SLOPES 3:1 OR FLATTER | 14 DAYS | 7 DAYS FOR SLOPES GREATER THAN 50' IN LENGTH |
| ALL OTHER AREAS WITH SLOPES FLATTER THAN 4:1 | 14 DAYS | NONE EXCEPT FOR PERIMETER AND HQW ZONES |

## TEMPORARY SEEDING SPECIFICATIONS

LATE WINTER AND EARLY SPRING
(FROM NC EROSION & SEDIMENT CONTROL DESIGN MANUAL - TABLE 6.10A)

SEEDING MIXTURE

| SPECIES | RATE (LB/ACRE) | (LB/1000 FT²) |
|---|---|---|
| RYE (GRAIN) | 120 | 2.75 |
| ANNUAL LESPEDEZA (KOBE IN PIEDMONT AND COASTAL PLAIN, KOREAN IN MOUNTAINS) | 50 | 1.15 |

OMIT ANNUAL LESPEDEZA WHEN DURATION OF TEMPORARY COVER IS NOT TO EXTEND BEYOND JUNE.

SEEDING DATES

MOUNTAINS -------- ABOVE 2500 FEET: FEB. 15 - MAY 15 BELOW 2500 FEET: FEB. 1- MAY 1
PIEDMONT -------- JAN. 1 - MAY 1
COASTAL PLAIN --- DEC. 1 - APR. 15

SOIL AMENDMENOT TO SCALE

APPLY LIME AND FERTILIZER ACCORDING TO SOIL TESTS, OR APPLY 2,000 LB/ACRE (45.9 LB/1000 SQ FT) GROUND AGRICULTURAL LIMESTONE (USE THE LOWER RATE ON SANDY SOILS) AND 750 LB/ACRE (17.2 LB/1000 SQ FT) 10-10-10 FERTILIZER.

MULCH

APPLY 4,000 LB/ACRE (91.83 LB/1000 SQ FT) STRAW. ANCHOR STRAW BY TACKING WITH ASPHALT, NETTING, OR A MULCH ANCHORING TOOL. A DISK WITH BLADES SET NEARLY STRAIGHT CAN BE USED AS A MULCH ANCHORING TOOL.

MAINTENANCE

REFERTILIZE IF GROWTH IS NOT FULLY ADEQUATE. RESEED, REFERTILIZE AND MULCH IMMEDIATELY FOLLOWING EROSION OR OTHER DAMAGE.

SUMMER
(FROM NC EROSION & SEDIMENT CONTROL DESIGN MANUAL - TABLE 6.10B)

SEEDING MIXTURE

| SPECIES | RATE (LB/ACRE) | (LB/1000 FT²) |
|---|---|---|
| GERMAN MILLET | 40 | 0.92 |

IN THE PIEDMONT AND MOUNTAINS, A SMALL-STEMMED SUDANGRASS MAY BE SUBSTITUTED AT A RATE OF 50 LB/ACRE.

SEEDING DATES

MOUNTAINS -------- MAY 15 - AUG. 15
PIEDMONT -------- MAY 1 - AUG. 15
COASTAL PLAIN --- APR. 15 - AUG. 15

SOIL AMENDMENOT TO SCALE

FOLLOW RECOMMENDATIONS OF SOIL TESTS OR APPLY 2,000 LB/ACRE (45.9 LB/1000 SQ FT) GROUND AGRICULTURAL LIMESTONE AND 750 LB/ACRE (17.2 LB/1000 SQ FT) 10-10-10 FERTILIZER.

MULCH

APPLY 4,000 LB/ACRE (91.83 LB/1000 SQ FT) STRAW. ANCHOR STRAW BY TACKING WITH ASPHALT, NETTING, OR A MULCH ANCHORING TOOL. A DISK WITH BLADES SET NEARLY STRAIGHT CAN BE USED AS A MULCH ANCHORING TOOL.

MAINTENANCE

REFERTILIZE IF GROWTH IS NOT FULLY ADEQUATE. RESEED, REFERTILIZE AND MULCH IMMEDIATELY FOLLOWING EROSION OR OTHER DAMAGE.

FALL
(FROM NC EROSION & SEDIMENT CONTROL DESIGN MANUAL - TABLE 6.10C)

SEEDING MIXTURE

| SPECIES | RATE (LB/ACRE) | (LB/1000 FT²) |
|---|---|---|
| RYE (GRAIN) | 120 | 2.75 |

SEEDING DATES

MOUNTAINS -------- AUG. 15 - DEC. 15
PIEDMONT -------- AUG. 15 - DEC. 30

SOIL AMENDMENOT TO SCALE

FOLLOW RECOMMENDATIONS OF SOIL TESTS OR APPLY 2,000 LB/ACRE (45.9 LB/1000 SQ FT) GROUND AGRICULTURAL LIMESTONE AND 750 LB/ACRE (17.2 LB/1000 SQ FT) 10-10-10 FERTILIZER.

MULCH

APPLY 4,000 LB/ACRE (91.83 LB/1000 SQ FT) STRAW. ANCHOR STRAW BY TACKING WITH ASPHALT, NETTING, OR A MULCH ANCHORING TOOL. A DISK WITH BLADES SET NEARLY STRAIGHT CAN BE USED AS A MULCH ANCHORING TOOL.

MAINTENANCE

REPAIR AND REFERTILIZE DAMAGED AREAS IMMEDIATELY. TOPDRESS WITH 50 LB/ACRE OF NITROGEN IN MARCH. IF IT IS NECESSARY TO EXTENT TEMPORARY COVER BEYOND JUNE 15, OVERSEED WITH 50 LB/ACRE KOBE (PIEDMONT AND COASTAL PLAIN) OR KOREAN (MOUNTAINS) LESPEDEZA IN LATE FEBRUARY OR EARLY MARCH.

## PERMANENT SEEDING SPECIFICATIONS

FALL AND EARLY SPRING
(FROM NC EROSION & SEDIMENT CONTROL DESIGN MANUAL - TABLE 6.11P)

SEEDING NO. 1CP FOR: WELL TO POORLY DRAINED SOILS WITH GOOD MOISTURE RETENTION: LOW MAINTENANCE

SEEDING MIXTURE

| SPECIES | RATE (LB/ACRE) | (LB/1000 FT²) |
|---|---|---|
| TALL FESCUE | 80 | 1.84 |
| PENSACOLA BAHIAGRASS | 50 | 1.15 |
| SERICEA LESPEDEZA | 80 | 0.69 |
| KOBE LESPEDEZA | 10 | 0.23 |

SEEDING NOTES

1. FROM SEPT. 1 - MAR. 1, USE UNSCARIFIED SERICEA SEED.
2. ON POORLY DRAINED SITES, OMIT SERICEA AND INCREASE KOBE TO 30 LB/ACRE.
3. WHERE A NEAT APPEARANCE IS DESIRED, OMIT SERICEA AND INCREASE KOBE TO 40 LB/ACRE.

NURSE PLANOT TO SCALE

BETWEEN APR. 15 AND AUG. 15, ADD 10 LB/ACRE GERMAN MILLET OR 15 LB/ACRE SUDANGRASS.
PRIOR TO MAY 1 OR AFTER AUG. 15, ADD 25 LB/ACRE RYE (GRAIN).

| SEEDING DATES | BEST | POSSIBLE |
|---|---|---|
| EARLY SPRING: | FEB. 15 - MAR. 20 | FEB. 15 - APR. 30 |
| FALL: | SEPT. 1 - SEPT. 30 | SEPT. 1 - OCT. 31 |

SOIL AMENDMENOT TO SCALE

APPLY LIME AND FERTILIZER ACCORDING TO SOIL TESTS, OR APPLY 3,000-5,000 LB/ACRE (68.9-114.8 LB/1000 SQ FT) GROUND AGRICULTURAL LIMESTONE (USE THE LOWER RATE ON SANDY SOILS) AND 1,000 LB/ACRE (22.9 LB/1000 SQ FT) 10-10-10 FERTILIZER.

MULCH

APPLY 4,000 LB/ACRE (91.83 LB/1000 SQ FT) GRAIN STRAW OR EQUIVALENT COVER OF ANOTHER SUITABLE MULCH. ANCHOR STRAW BY TACKING WITH ASPHALT, NETTING, OR BY CRIMPING WITH A MULCH ANCHORING TOOL. A DISK WITH BLADES SET NEARLY STRAIGHT CAN BE USED A MULCH ANCHORING TOOL.

MAINTENANCE

IF GROWTH IS LESS THAN FULLY ADEQUATE, REFERTILIZE IN THE SECOND YEAR, ACCORDING TO SOIL TESTS OR TOPDRESS WITH 500 LB/ACRE (11.5 LB/1000 SQ FT) 10-10-10 FERTILIZER, MOW AS NEEDED WHEN SERICEA IS OMITTED FROM THE MIXTURE. RESEED, FERTILIZE, AND MULCH DAMAGED AREAS IMMEDIATELY.

[1] REFER TO APPENDIX 8.02 FOR BOTANICAL NAMES

LATE SPRING AND EARLY SUMMER
(FROM NC EROSION & SEDIMENT CONTROL DESIGN MANUAL - TABLE 6.11T)

SEEDING NO. 5CP FOR: WELL DRAINED SANDY LOAMS TO DRY SANDS; LOW MAINTENANCE

SEEDING MIXTURE

| SPECIES | RATE (LB/ACRE) | (LB/1000 FT²) |
|---|---|---|
| PENSACOLA BAHIAGRASS | 50 | 1.15 |
| SERICEA LESPEDEZA | 30 | 1.69 |
| COMMON BERMUDAGRASS | 10 | 0.23 |
| GERMAN MILLET | 10 | 0.23 |

SEEDING NOTES

1. WHERE A NEAT APPEARANCE IS DESIRED, OMIT SERICEA.
2. USE A COMMON BERMUDAGRASS ONLY ON ISOLATED SITES WHERE IT CANNOT BECOME A PEST. BERMUDAGRASS MAY BE REPLACED WITH 5 LB/ACRE CENTIPEDEGRASS.

SEEDING DATES

APRIL 1 - JULY 15

SOIL AMENDMENOT TO SCALE

APPLY LIME AND FERTILIZER ACCORDING TO SOIL TESTS, OR APPLY 3,000 LB/ACRE (68.9 LB/1000 SQ FT) GROUND AGRICULTURAL LIMESTONE AND 500 LB/ACRE (11.5 LB/1000 SQ FT) 10-10-10 FERTILIZER.

MULCH

APPLY 4,000 LB/ACRE (91.83 LB/1000 SQ FT) GRAIN STRAW OR EQUIVALENT COVER OF ANOTHER SUITABLE MULCH. ANCHOR STRAW BY TACKING WITH ASPHALT, NETTING, OR BY CRIMPING WITH A MULCH ANCHORING TOOL. A DISK WITH BLADES SET NEARLY STRAIGHT CAN BE USED A MULCH ANCHORING TOOL.

MAINTENANCE

REFERTILIZE THE FOLLOWING APR. WITH 50 LB/ACRE (1.15 LB/1000 SQ FT) NITROGEN. REPEAT AS GROWTH REQUIRES. MAY BE MOWED ONLY ONCE A YEAR. WHERE A NEAT APPEARANCE IS DESIRED, OMIT SERICEA AND MOW AS OFTEN AS NEEDED.

[1] REFER TO APPENDIX 8.02 FOR BOTANICAL NAMES

COPYRIGHT © 2019
SEPI INC.

X:\2018\SE18.191.00 SECU - Wilmington South 17th Street Branch\Design\Details\Standard Details.dwg PLOTTED: 7/3/2019 10:10 AM BY: JOHN SCOTT

SUMMIT DESIGN AND ENGINEERING SERVICES
Creatively Inspired - Technically Executed
License #: P-0339
100 East Six Forks Road, Suite 300
Raleigh, NC 27609
Voice: (919) 322-0115 Fax: (919) 322-0116
www.SummitDE.net

PRELIMINARY NOT FOR CONSTRUCTION

SEPI
1 GLENWOOD AVE., SUITE 600
RALEIGH, NC 27603
PHONE 919.789.9977
11020 DAVID TAYLOR DR., SUITE 115
CHARLOTTE, NC 28262
PHONE 704.714.4880
5030 NEW CENTRE DR., SUITE B
WILMINGTON, NC 28403
PHONE 910.523.5715
sepiinc.com
TRANSPORTATION•TRAFFIC•SURVEYING•ENVIRONMENTAL•SITE/CIVIL•INSPECTIONS•CONSTRUCTION MANAGEMENT

ARCHITECT OF RECORD

PROJECT MANAGER
MTA

DRAWN BY JRS
FIRST ISSUE DATE 07/03/2019

THE LOCATIONS OF EXISTING UNDERGROUND UTILITIES ARE APPROXIMATE AND HAVE NOT BEEN INDEPENDENTLY VERIFIED BY THE OWNER. THE CONTRACTOR SHALL INDEPENDENTLY VERIFY THE LOCATIONS OF ALL EXISTING UTILITIES PRIOR TO STARTING ANY CONSTRUCTION. THE CONTRACTOR SHALL BE RESPONSIBLE FOR THE PROTECTION OF ALL UTILITIES LOCATED OR NOT SHOWN ON THE PLANS. THE CONTRACTOR SHALL BE RESPONSIBLE FOR THE REPAIR OF DAMAGED UTILITIES RESULTING FROM THE CONSTRUCTION OPERATIONS.

811 Know what's below. Call before you dig.
3 WORKING DAYS BEFORE YOU DIG
IT'S THE LAW!
NOTICE: THE LOCATIONS OF UNDERGROUND UTILITIES

OWNER/DEVELOPER/APPLICANT
STATE EMPLOYEES' CREDIT UNION
ADDRESS:
119 N. SALISBURY STREET
RALEIGH, NORTH CAROLINA 27603
PHONE: 919-839-5300

PROJECT
STATE EMPLOYEES' CREDIT UNION
ADDRESS:
4355 S 17TH STREET
WILMINGTON NC 28412

EROSION CONTROL DETAILS

PROJECT NO.
SE18.191.00

SHEET NO.
C-5.5

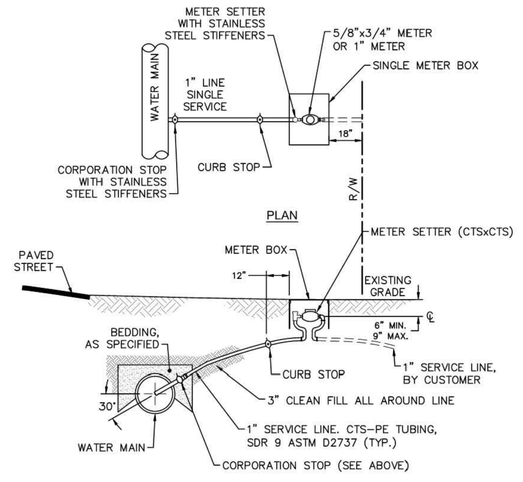


NOTES:
1. NO JOINT SHALL BE INSTALLED BETWEEN THE MAIN SERVICE TAP AND THE METER STOP. ALL SERVICES SHALL BE INSTALLED PERPENDICULAR TO MAIN.
2. SERVICE SADDLES ON PVC MAINS SHALL BE WIDE BAND BRASS BODY.
3. METER BOXES SUBJECT TO TRAFFIC LOADS SHALL CONFORM TO ASTM A48, CLASS 30B AND AASHTO H20 LOAD RATING STANDARDS.
4. WATER SERVICE LINE SHALL TERMINATE 18" WITHIN RIGHT-OF-WAY LINE.
5. WATER METER BOXES ARE TO BE A MINIMUM OF 5 FEET FROM THE PROPERTY CORNER.
6. SERVICE PIPING AND METER SETTER TO BE CENTERED IN THE METER BOX.

| DETAIL: SINGLE WATER SERVICE CONNECTION - TYPICAL SHORT-SIDE CONNECTION | CAPE FEAR PUBLIC UTILITY AUTHORITY 235 GOVERNMENT CENTER DRIVE WILMINGTON, NC 28403 OFFICE: (910)332-6560 | DETAIL NO: W-1 |
|---|---|---|
| SCALE: NOT TO SCALE / CFPUA DETAIL DATE: 01/01/19 | Stewardship. Sustainability. Service. | SHEET NO: - |
| CFPUA REV. No: 1 | | |

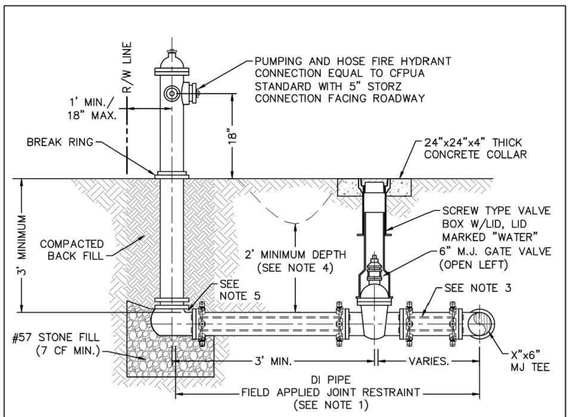


NOTES
1. JOINT RESTRAINT SYSTEMS SHALL BE WEDGE ACTION STYLE FOR DI.
2. WHEN HYDRANT LEGS REQUIRE FULL LENGTH PIPE SECTIONS, OVER BELL RESTRAINT SYSTEM SHALL HAVE 316 STAINLESS STEEL HARNESS AND FASTENERS.
3. CONTINUOUS 316 STAINLESS STEEL RODS (TEE TO VALVE AND VALVE TO HYDRANT) MAY BE USED WITH COR-BLUE MJ T-BOLT AND GASKET KITS, AS AN ALTERNATIVE.
4. HYDRANT AND VALVE SHALL BE PLACED OUTSIDE DITCH LIMITS.
5. WEEP HOLES OPEN AND UNBLOCKED TO DRAIN.
6. MJ TEE SHALL BE RESTRAINED ON EACH SIDE OF MAIN PLUS MAIN VALVES, FITTING, OR JOINTS WITHIN 10-FEET OF MJ TEE.
7. TRACING WIRE SHALL EXTEND ALONG HYDRANT LATERAL AND UP TO FINISHED GRADE WITH 2-FEET EXTENDED ABOVE THE BREAK RING OF HYDRANT.

| DETAIL: FIRE HYDRANT ASSEMBLY | CAPE FEAR PUBLIC UTILITY AUTHORITY 235 GOVERNMENT CENTER DRIVE WILMINGTON, NC 28403 OFFICE: (910)332-6560 | DETAIL NO: W-9 |
|---|---|---|
| SCALE: NOT TO SCALE / CFPUA DETAIL DATE: 01/01/19 | Stewardship. Sustainability. Service. | SHEET NO: - |
| CFPUA REV. No: 1 | | |

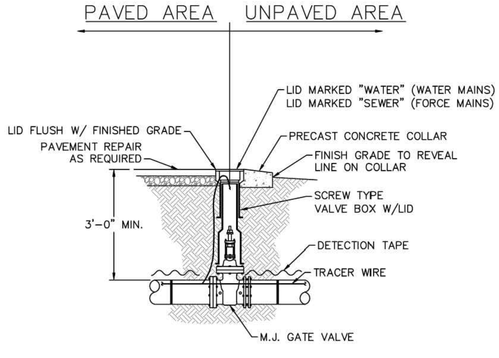


NOTES:
1. TRACER WIRE SHALL PENETRATE VALVE BOX THROUGH DRILLED HOLE APPROX. 6" BELOW GRADE WITH MINIMUM 2-FEET EXTRA LENGTH COILED IN THE VALVE BOX. SEE WS-6.

| DETAIL: VALVE DETAIL | CAPE FEAR PUBLIC UTILITY AUTHORITY 235 GOVERNMENT CENTER DRIVE WILMINGTON, NC 28403 OFFICE: (910)332-6560 | DETAIL NO: WS-5 |
|---|---|---|
| SCALE: NOT TO SCALE / CFPUA DETAIL DATE: 01/01/19 | Stewardship. Sustainability. Service. | SHEET NO: - |
| CFPUA REV. No: 1 | | |

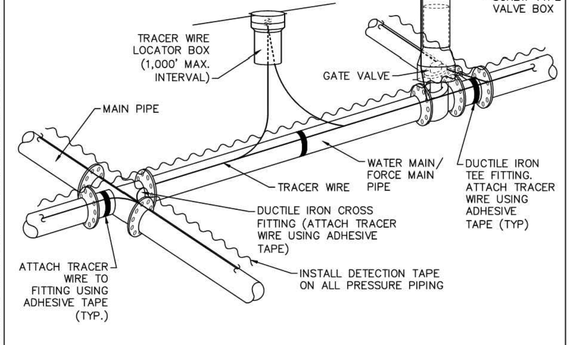


NOTES:
1. TRACER WIRE SHALL BE #10 COPPER SOLID CORE COPPER WIRE WITH GAS AND OIL RESISTANT INSULATION AND DIRECT BURY RATING.
2. WIRE SHALL BE STRAPPED TO ALL PVC PIPING WITH ADHESIVE TAPE AT 12 FOOT INTERVALS.
3. SECURE WIRE TO ALL TEE AND CROSS FITTINGS WITH ADHESIVE TAPE..
4. ALL SPLICES IN THE WIRE SHALL BE MADE WITH 3M DBR DIRECT BURY SPLICE KITS.

| DETAIL: TRACER WIRE DETAIL | CAPE FEAR PUBLIC UTILITY AUTHORITY 235 GOVERNMENT CENTER DRIVE WILMINGTON, NC 28403 OFFICE: (910)332-6560 | DETAIL NO: WS-6 |
|---|---|---|
| SCALE: NOT TO SCALE / CFPUA DETAIL DATE: 01/01/19 | Stewardship. Sustainability. Service. | SHEET NO: - |
| CFPUA REV. No: 1 | | |

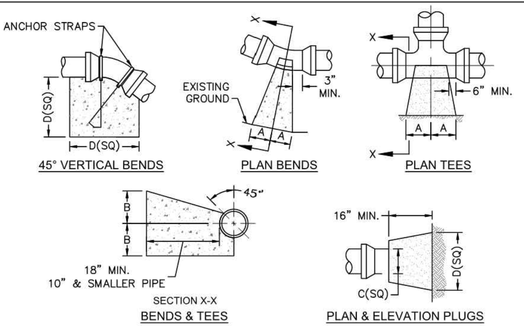


| SIZE | 90 BENDS A | 90 BENDS B | 45 BENDS A | 45 BENDS B | 22-1/2 BENDS A | 22-1/2 BENDS B | TEES/PLUGS A | TEES/PLUGS B | 45 VERT. BENDS |
|---|---|---|---|---|---|---|---|---|---|
| 3" | 8" | 6" | 5" | 6" | 3" | 7" | 6" | 8" | 27" |
| 4" | 8" | 9" | 5" | 8" | 3" | 11" | 6" | 9" | 28" |
| 6" | 14" | 11" | 9" | 9" | 8" | 8" | 12" | 9" | 36" |
| 8" | 16" | 16" | 12" | 12" | 10" | 13" | 14" | 13" | 42" |
| 10" | 18" | 22" | 15" | 14" | 14" | 16" | 18" | 15" | 50" |
| 12" | 20" | 28" | 18" | 17" | 16" | 16" | 22" | 18" | 62" |
| 14" | 26" | 29" | 21" | 19" | 18" | 18" | 26" | 20" | 72" |
| 16" | 33" | 29" | 25" | 21" | 20" | 21" | 32" | 21" | 83" |
| 18" | 40" | 30" | 28" | 24" | 22" | 23" | 36" | 24" | 88" |

NOTES:
1. THRUST BLOCKING IS NOT PERMITTED EXCEPT IN SPECIAL INSTALLATIONS WHERE DESIGNED BY ENGINEER AND APPROVED BY CFPUA.
2. ALLOW 7-DAY MINIMUM CONCRETE CURE TIME BEFORE PLACING LOAD ON THRUST BLOCK
3. BASED ON 160 PSI TEST PRESSURE AND 2,000 PSF SOIL BEARING CAPACITY.
4. ALL BEARING SURFACES TO BE CARRIED TO UNDISTURBED GROUND.
5. PIPE & FITTINGS TO BE WRAPPED IN 10 MIL PLASTIC PRIOR TO THRUST BLOCK BEING POURED.

| DETAIL: THRUST BLOCK | CAPE FEAR PUBLIC UTILITY AUTHORITY 235 GOVERNMENT CENTER DRIVE WILMINGTON, NC 28403 OFFICE: (910)332-6560 | DETAIL NO: WS-13 |
|---|---|---|
| SCALE: NOT TO SCALE / CFPUA DETAIL DATE: 01/01/19 | Stewardship. Sustainability. Service. | SHEET NO: - |
| CFPUA REV. No: 1 | | |

COPYRIGHT © 2019
SEPI INC.

SUMMIT DESIGN AND ENGINEERING SERVICES
Creatively Inspired - Technically Executed
License #: P-0339
100 East Six Forks Road, Suite 300
Raleigh, NC 27609
Voice: (919) 322-0115 Fax: (919) 322-0116
www.SummitDE.net

PRELIMINARY NOT FOR CONSTRUCTION

SEPI
1 GLENWOOD AVE, SUITE 600 RALEIGH, NC 27603 PHONE 919.789.9977
11020 DAVID TAYLOR DR, SUITE 115 CHARLOTTE, NC 28262 PHONE 704.714.4880
5030 NEW CENTRE DR., SUITE B WILMINGTON, NC 28403 PHONE 910.523.5715
sepinc.com
TRANSPORTATION•TRAFFIC•SURVEYING•ENVIRONMENTAL•SITE/CIVIL•INSPECTIONS•CONSTRUCTION MANAGEMENT

ARCHITECT OF RECORD

PROJECT MANAGER
MTA

DRAWN BY JRS
FIRST ISSUE DATE 07/03/2019

811 Know what's below. Call before you dig.
3 WORKING DAYS BEFORE YOU DIG
CALL 811 TO REQUEST UNDERGROUND FACILITIES

THE LOCATIONS OF EXISTING UNDERGROUND UTILITIES HAVE BEEN PLACED ON THIS PLAN AS ACCURATELY AS THE EXISTING INFORMATION AVAILABLE TO US WOULD ALLOW. THE CONTRACTOR MUST BE RESPONSIBLE FOR CONTACTING ALL UTILITIES IN ADVANCE OF CONSTRUCTION TO DETERMINE THE EXACT LOCATION OF ALL UTILITIES. THE CONTRACTOR IS ALSO RESPONSIBLE FOR PROTECTING ALL UTILITIES IN THE CONSTRUCTION AREA. THE CONTRACTOR SHALL BE RESPONSIBLE FOR ANY DAMAGE TO UTILITIES CAUSED BY HIS OPERATIONS.

NOTICE:
THE CONTRACTOR SHALL BE RESPONSIBLE FOR THE PROTECTION OF ALL UTILITIES AND SHALL BE RESPONSIBLE FOR ALL REPAIRS TO UTILITIES OR OTHER PROPERTY DAMAGED BY HIS OPERATIONS.

OWNER/DEVELOPER/APPLICANT
STATE EMPLOYEES' CREDIT UNION
ADDRESS:
119 N. SALISBURY STREET
RALEIGH, NORTH CAROLINA 27603
PHONE: 919-839-5300

PROJECT
STATE EMPLOYEES' CREDIT UNION
ADDRESS:
4355 S 17TH STREET
WILMINGTON NC 28412

CFPUA DETAILS

PROJECT NO.
SE18.191.00

SHEET NO.
C-5.6

X:\2018\SE18.191.00 SECU - Wilmington South 17th Street Branch\Design\Details\Standard Details.dwg PLOTTED: 7/3/2019 10:10 AM BY: JOHN SCOTT

CAPE FEAR PUBLIC UTILITY AUTHORITY STANDARD NOTES:

1. ALL PROPOSED ADDITIONS TO THE CAPE FEAR PUBLIC UTILITY AUTHORITY (CFPUA) WATER DISTRIBUTION AND SANITARY SEWER COLLECTION SYSTEMS, AS SHOWN AND SPECIFIED HEREIN, SHALL BE DESIGNED AND CONSTRUCTED TO CONFORM TO STATE RULES AND THE CFPUA'S MINIMUM TECHNICAL STANDARDS. THE CFPUA MINIMUM TECHNICAL STANDARDS ARE CONTAINED IN THE CURRENT DESIGN GUIDANCE MANUAL, MATERIAL SPECIFICATION MANUAL, TECHNICAL SPECIFICATIONS FOR CONSTRUCTION, AND STANDARD DRAWING DETAILS.
2. SEWER GUARDS REQUIRED AT ALL MANHOLES. STAINLESS STEEL SEWER GUARDS REQUIRED AT MANHOLES LOCATED IN TRAFFIC AREAS.
3. WATER AND SEWER SERVICES SHALL BE PERPENDICULAR TO MAIN AND TERMINATE 18" INSIDE RIGHT-OF-WAY LINE. SEWER SERVICES IN CUL-DE-SACS ARE REQUIRED TO BE PERPENDICULAR, OR MUST ORIGINATE IN END OF LINE MANHOLE AND TERMINATE 18" INSIDE RIGHT-OF-WAY LINE.
4. ALL SEWER SERVICES CONNECTING INTO DUCTILE IRON MAINS SHALL ALSO BE CONSTRUCTED OF DIP.
5. MINIMUM 10' UTILITIES EASEMENT PROVIDED ALONG THE FRONTAGE OF ALL LOTS AND AS SHOWN FOR NEW DEVELOPMENTS.
6. NO FLEXIBLE COUPLINGS SHALL BE USED.
7. ALL STAINLESS STEEL FASTENERS SHALL BE TYPE 316.
8. CLEANOUTS SHALL BE LOCATED A MINIMUM OF 12 FEET FROM ALL PROPERTY CORNERS.
9. WATER METER BOXES ARE TO BE A MINIMUM OF 5 FEET FROM THE PROPERTY CORNER.
10. UNUSED SERVICES SHALL BE ABANDONED. ABANDONED WATER SERVICES SHALL BE DISCONNECTED FROM MAIN.
11. A MINIMUM OF 10' OF MAIN LINE SHALL BE REPLACED FOR NEW CONNECTIONS TO EXISTING CLAY GRAVITY SEWER MAINS.

| DETAIL: STANDARD NOTES (REQUIRED ON ALL PLAN AND PROFILE SHEETS) | CAPE FEAR PUBLIC UTILITY AUTHORITY 235 GOVERNMENT CENTER DRIVE WILMINGTON, NC 28403 OFFICE: (910)332-6560 | DETAIL NO: WS-14 |
|---|---|---|
| SCALE: NOT TO SCALE / CFPUA DETAIL DATE: 01/02/19 | Stewardship. Sustainability. Service. | SHEET NO: - |
| CFPUA REV. No: 2 | | |

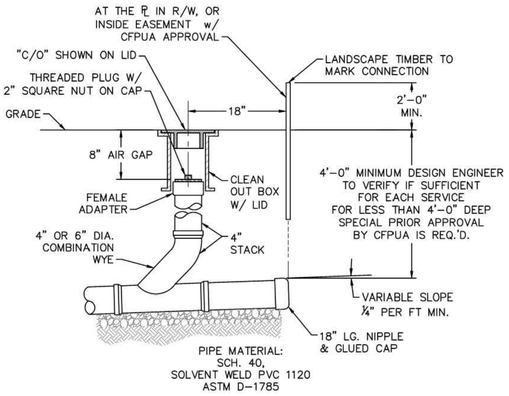


NOTES:

1. FOR PRIVATE 8" SERVICES, MANHOLES ARE REQUIRED FOR CONNECTION TO SYSTEM AND AT THE PROPERTY LINE, WITH REQUIRED EASEMENT.
2. CLEANOUTS SHALL BE LOCATED A MINIMUM OF 12 FEET FROM ALL PROPERTY CORNERS.

| DETAIL: SEWER SERVICE CONNECTION - TYPICAL CLEAN-OUT | CAPE FEAR PUBLIC UTILITY AUTHORITY 235 GOVERNMENT CENTER DRIVE WILMINGTON, NC 28403 OFFICE: (910)332-6560 | DETAIL NO: S-13 |
|---|---|---|
| SCALE: NOT TO SCALE / CFPUA DETAIL DATE: 01/01/19 | Stewardship. Sustainability. Service. | SHEET NO: - |
| CFPUA REV. No: 1 | | |

COPYRIGHT © 2019
SEPI INC.

X:\2018\SE18.191.00 SECU - Wilmington South 17th Street Branch\Design\Details\Standard Details.dwg PLOTTED: 7/3/2019 10:10 AM BY: JOHN SCOTT

SUMMIT DESIGN AND ENGINEERING SERVICES
Creatively Inspired - Technically Executed
License #: P-0339
100 East Six Forks Road, Suite 300
Raleigh, NC 27609
Voice: (919) 322-0115 Fax: (919) 322-0116
www.SummitDE.net

PRELIMINARY NOT FOR CONSTRUCTION

SEPI
1 GLENWOOD AVE, SUITE 600 PHONE 919.789.9977
11020 DAVID TAYLOR DR, SUITE 115 CHARLOTTE, NC 28262 PHONE 704.714.4880
5030 NEW CENTRE DR., SUITE B WILMINGTON, NC 28403 PHONE 910.523.5715
sepinc.com
TRANSPORTATION • TRAFFIC • SURVEYING • ENVIRONMENTAL • SITE/CIVIL • INSPECTIONS • CONSTRUCTION MANAGEMENT

ARCHITECT OF RECORD

PROJECT MANAGER
MTA

DRAWN BY JRS | FIRST ISSUE DATE 07/03/2019

THE LOCATIONS OF EXISTING UNDERGROUND UTILITIES ARE SHOWN AS ESTIMATED BY OTHERS UNLESS OTHERWISE INDICATED. THE ENGINEER ASSUMES NO RESPONSIBILITY FOR THE ACCURACY OF SUCH DATA. THE CONTRACTOR SHALL VERIFY THE LOCATIONS OF ALL UNDERGROUND UTILITIES AS NECESSARY TO AVOID DAMAGE DURING CONSTRUCTION.

811 Know what's below. Call before you dig.
3 WORKING DAYS BEFORE YOU DIG
IT''S THE LAW
NOTICE: UNDERGROUND FACILITIES

OWNER/DEVELOPER/APPLICANT
STATE EMPLOYEES' CREDIT UNION
ADDRESS:
119 N. SALISBURY STREET
RALEIGH, NORTH CAROLINA 27603
PHONE: 919-839-5300

PROJECT
STATE EMPLOYEES' CREDIT UNION
ADDRESS:
4355 S 17TH STREET
WILMINGTON NC 28412

CFPUA DETAILS

PROJECT NO.
SE18.191.00

SHEET NO.
C-5.7